City of Bishop, California

Bidding Information

and

Contract Documents

for

West Jay Street Extension

in the

City of Bishop, County of Inyo, California

17 August 2019

Approved:

David Grah
Director of Public Works

Notice To Bidders

Sealed proposals will be received at the City of Bishop Public Works office, City Hall, 377 West Line Street, Bishop, California, 93514 until three o'clock (3:00) in the afternoon on 13 September 2019, for furnishing all labor, materials, tools, implements and machinery to do and complete all work in a manner satisfactory to the City Engineer, for the following project:

West Jay Street Extension

Together with such other incidental items as are necessary to complete the work in the manner and time prescribed and in strict conformity with the contract documents.

At 3:01 in the afternoon on the above date, said proposals will be publicly opened and read aloud.

All proposals shall be made using the forms furnished by the City and shall be enclosed and sealed in an envelope which is addressed to the City Council, Bishop, California, and is clearly labeled:

Bid for West Jay Street Extension

Bid books including plans, specifications, bid forms to be used for bidding on this project and other contract documents can be obtained at the City of Bishop City Hall, 377 West Line Street, Bishop, California, 93514, 760-873-8458, and publicworks@cityofbishop.com. Only bids referencing all addendums issued for the project shall be considered. To receive addendums and other information issued on the project during the advertisement period, provide your contact information to the Bishop Public Works in City Hall at the above addresses and number at least two working days prior to bid opening.

This project is located on West Jay Street at the south city limit of the City of Bishop. This project includes the construction pavement, curbs, sidewalk, water line, and sewer line. The project includes furnishing of all labor, implements, tools, machinery, materials and all other work required to complete the project.

Bidders may attend a pre-bid review of the project site with project staff at ten o'clock (10:00) in the morning on 28 August 2019. To participate in this review, be on West Jay Street near South Main Street at this date and time.

The estimated range for the construction cost of this phase of the project is from $700,000 to $900,000.

Contracting preferences apply to this project.

Technical questions should be directed to the Director of Public Works, City of Bishop, 377 West Line Street, Bishop, California, 93514, 760-873-8458, publicworks@cityofbishop.com.

The successful bidder shall furnish all items required in the contract documents.

Proposals shall include prices for all items of work for all construction options contained in the contract documents. The City intends to award the contract to the bidder with the lowest responsive bid for the most extensive construction option the City is able to fund from the allotment available for this project. Responsive bid proposals shall include:

1. Completed Bid Form
2. Bid Bond or other security
3. Completed Non-collusion Declaration form
4. Completed Contractor's Certificate Regarding Worker's Compensation form
5. Completed Proposed Equipment and Material Manufacturers form
6. Completed Proposed Subcontractors form
7. Completed Contractor Licenses form
8. If a local business preference is claimed, completed City of Bishop Local Business Verification form

The City of Bishop hereby notifies all bidders that it will affirmatively ensure that in any contract entered into pursuant to this advertisement, disadvantaged business enterprises will be afforded full opportunity to submit bids in response to this invitation and will not be discriminated against on the grounds of race, color, or national origin in consideration for an award.

The contract is subject to state contract nondiscrimination and compliance requirements pursuant to Government Code, Section 12990.

Pursuant to Section 1773 of the Labor Code, the general prevailing wage rates in the county, or counties, in which the work is to be done have been determined by the Director of the California Department of Industrial Relations. These wages are set forth in the General Prevailing Wage Rates for this project, available at City of Bishop and available from the California Department of Industrial Relations' Internet web site at http://www.dir.ca.gov/DLSR/PWD. Future effective general prevailing wage rates, which have been predetermined and are on file with the California Department of Industrial Relations are referenced but not printed in the general prevailing wage rates.

The Contractor shall procure all required permits and licenses, pay all charges, fees and taxes, and give all notices necessary and incidental to the due and lawful prosecution of the work.

The City Council of the City of Bishop, California, reserves the right to reject any and all proposals and to waive any formalities in the proposal.

Bid Form

Proposal to City of Bishop for the construction of

West Jay Street Extension

Bidder Information:

Name: _____

Address: _____

_____

Phone: _____

Email: _____

To the Bishop City Council:
Pursuant to and in compliance with your Notice to Bidders inviting sealed proposals (bids) and the other documents relating thereto, the undersigned bidder, being fully familiar with the terms of the contract documents, local conditions affecting the performance of the contract, the character, quality, quantities, and scope of work, and the cost of the work at the place where the work is to be done, hereby proposes and agrees to perform within the time stipulated in the contract, including all of its component parts and everything required to be performed, and to furnish any and all of the labor, material, tools, equipment, transportation, services, permits, utilities, and all other items necessary to perform the contract and complete in a workman like manner, all of the work required in connection with the construction of said work all in strict conformity with the plans and specifications and other contract documents, including Addenda _____, _____, _____, and _____, for the prices hereinafter set forth.

The bidder, under penalty of perjury, certifies that, except as noted on an attached page, he/she or any other person associated therewith in the capacity of owner, partner, director, officer, and manager: Is not currently under suspension, debarment, voluntary exclusion, or determination of ineligibility by any federal agency; Has not been suspended, debarred, voluntarily excluded or determined ineligible by any federal agency within the past 3 years; Does not have a proposed debarment pending; and Has not been indicted, convicted, or had a civil judgment rendered against it by a court of competent jurisdiction in any matter involving fraud or official misconduct within the past 3 years. If there are any exceptions to this certification, insert the exceptions on an attached page.

The undersigned as bidder, declares that the only persons or parties interested in this proposal as principals are those named herein and that this proposal is made without collusion with any person, firm, or corporation; and he proposes and agrees, if the proposal is accepted, that he will execute a contract with the City in the form set forth in the contract documents and that he will accept in full payment thereof the unit prices on the following page.

Item	Quantity	Unit	Description	Unit Price	Total Item Price
1	1	LS	Mobilization		
2	1	LS	Erosion Control		
3	1	LS	Traffic Control		
4	13,197	SF	Remove Pavement		
5	4,574	SF	Remove Concrete		
6	1	EA	Irrigation		
7	1	EA	Inlet		
8	10	LF	Storm Drain		
9	1	EA	Storm Drain Manhole		
10	6,595	SF	Sidewalk		
11	550	SF	Driveway		
12	806	LF	Curb		
13	2	EA	Curb Ramp		
14	672	CY	Aggregate Base		
15	591	TON	Asphalt Concrete		
16	7	EA	Tree		
17	839	LF	Water Line		
18	1	EA	Hydrant		
19	810	LF	Sewer		
20	3	EA	Sewer Manhole		

CY is cubic yard; EA is each; LF is linear foot; LS is lump sum; SF is square foot

In the event the total amount for an individual bid item does not agree with the product of the estimated quantity and unit price bid for that item, the unit price stated for the individual item shall govern and the incorrect total amount for that item shall be corrected. In the event the Total Bid does not agree with the sum of the total amounts bid for the respective bid items, the total amounts for the respective bid items shall govern and the incorrect Total Bid shall be corrected.

Unit prices for all items, extensions and total amount of bid must be shown. The proposal submitted shall be in effect for 30 days after the opening of bids.

Accompanying this proposal is a deposit in the form of a _____(Insert words "certified check", "cashier's check", "bid bond", "cash", or appropriate description of substitute security, as the case may be) in the amount of $_____ which amount is not less than 10% of the total bid, payable to the CITY OF BISHOP.

The undersigned deposits the above-named security as a proposal guarantee and agrees that it shall be forfeited to the City in case this proposal is accepted by the City and the undersigned fails to execute a contract with the City as specified in the contract documents or fails to furnish the required payment and performance bonds, or substitute, and insurance certificates and endorsements. Should the City be required to engage the services of an attorney in connection with the enforcement of this bid, bidder promises to pay City's reasonable attorneys' fees, incurred with or without suit.

The names of all persons interested in the foregoing proposals as principals are as follows. If bidder is a corporation, state legal name of corporation, also names of the president, secretary, treasurer, and manager thereof; if a general partnership, state true name of firm, also names of all individual partners composing firm; if a limited partnership, the names of all general partners and limited partners; if an individual, state first and last names in full; if the bidder is a joint venture, state the complete name of each party.

_____

_____

_____

_____

Authorized Bidder Representative:

Name (typed or printed): _____ (SEAL)

By: _____

(Individual's signature – attach evidence of authority to sign)

Title: _____

Bid Bond

(10% of Total Bid Amount)

We, _____as Principal,

and _____as Surety, jointly and severally, bind ourselves, our heirs, representatives, successors and assigns, as set forth herein to the

City of Bishop, California

(herein called City) for payment of the penal sum of _____ _____ _____ Dollars ($_____), lawful money of the United States. Principal has submitted the accompanying bid for the construction of

West Jay Street Extension

If the Principal is awarded the contract and enters into a written contract, in the form prescribed by the City, at the price designated by his bid, and files two bonds with the City, or substitute security in lieu thereof, one to guarantee payment for labor and materials and the other to guarantee faithful performance, in the time and manner specified by the City, and carries all insurance in type and amount which conforms to the contract documents, and furnishes required certificates and endorsements thereof, then this obligation shall be null and void; otherwise it shall remain in full force and effect.

Forfeiture of this bond, or any deposit made in lieu thereof, shall not preclude the City from seeking all other remedies provided by law to cover losses sustained as a result of the Principal's failure to do any of the foregoing.

Principal and Surety agree that if the City is required to engage the services of an attorney in connection with the enforcement of this bond, each shall pay City's reasonable attorney's fees incurred with or without suit.

Executed on _____

_____
PRINCIPAL

(Seal of Corporation)

By _____

Title _____

(Attach Acknowledgment of Authorized Representative of Principal)

Any claims under this bond may be addressed to:

_____(Name and address of Surety)

_____

_____

_____

_____

_____(Name and address of Surety's agent for service of process in California, if different from above)

_____

_____

_____ (Telephone number of Surety's agent in California)

(Attach Acknowledgement)

_____
SURETY

By_____
(Attorney-in-Fact)

Non-collusion Declaration

The undersigned declares:

I am the _____

of _____,

the party making the foregoing bid.

The bid is not made in the interest of, or on behalf of, any undisclosed person, partnership, company, association, organization, or corporation. The bid is genuine and not collusive or sham. The bidder has not directly or indirectly induced or solicited any other bidder to put in a false or sham bid. The bidder has not directly or indirectly colluded, conspired, connived, or agreed with any bidder or anyone else to put in a sham bid, or to refrain from bidding. The bidder has not in any manner, directly or indirectly, sought by agreement, communication, or conference with anyone to fix the bid price of the bidder or any other bidder, or to fix any overhead, profit, or cost element of the bid price, or of that of any other bidder. All statements contained in the bid are true. The bidder has not, directly or indirectly, submitted his or her bid price or any breakdown thereof, or the contents thereof, or divulged information or data relative thereto, to any corporation, partnership, company, association, organization, bid depository, or to any member or agent thereof, to effectuate a collusive or sham bid, and has not paid, and will not pay, any person or entity for such purpose.

Any person executing this declaration on behalf of a bidder that is a corporation, partnership, joint venture, limited liability company, limited liability partnership, or any other entity, hereby represents that he or she has full power to execute, and does execute, this declaration on behalf of the bidder.

I declare under penalty of perjury under the laws of the State of California that the foregoing is true and correct and that this declaration is executed on

Date _____ at

City, State _____

Signature _____

Printed Name _____

Contractor's Certificate Regarding Worker's Compensation

Description of Contract: City of Bishop **West Jay Street Extension**

Labor Code Section 3700 Provides (in part):

> "Every employer except the State shall secure the payment of compensation in one or more of the following ways:
>
> A. By being insured against liability to pay compensation in one or more insurers duly authorized to write compensation insurance in this State.
>
> B. By securing from the Director of Industrial Relations a certificate of consent to self-insure, which may be given upon furnishing proof satisfactory to the Director of Industrial Relations of ability to self-insure and to pay any compensation that may become due to his employees."

I am aware of the provisions of Section 3700 of the Labor Code which require every employer to be insured against liability for worker's compensation or to undertake self-insurance in accordance with the provisions of that code, and I will comply with such provisions before commencing the performance of the work of this contract.

Dated: _____ _____

(Contractor)

By _____

_____

(Official Title)

Proposed Equipment And Material Manufacturers

Awarding of a contract will not imply approval by the City of the manufacturers or suppliers proposed by the Contractor. The proposed equipment and materials to be incorporated in the work, their manufacturers, and suppliers are:

Proposed Subcontractors

As required by Section 4100-4107 of the Public Contract Code, the Contractor shall list the subcontractors proposed for this project. No substitution will be permitted after award of contract except upon written approval of the City. The proposed subcontractors on this project are listed below. If small business subcontracting preference is claimed, provide percentage of total bid for each small business subcontractor.

Work	% of Bid	Name	License	PWCR	Location

Contractor Licenses

The Contractor's license classifications required for this project are as follows:

Class A – General Engineering Contractor

These classifications are provided for information purposes only. The Engineer does not warrant that all classifications required for the project are listed.

It is the City's intent that "plans," as used in Public Contract Code Section 3300, is defined as the construction contract documents, which include both drawings and specifications.

The contractor hereby confirms that it has all licenses and permits required by federal, state, and local statutes, regulations, and ordinances. The following are the Contractor's applicable license numbers:

Contractor's License and PWCR Numbers	License Expiration Date
_____	_____
_____	_____
_____	_____
_____	_____

I state under penalty of perjury that all information submitted by me and included in this contract is true and correct.

Signature of Bidder: _____

_____

_____

_____

Dated: _____

City of Bishop Local Business Verification

Complete and submit this form to claim Local Business status pursuant to Chapter 3.26, Contracting Preferences, of the Bishop Municipal Code.

Business: _____

Contact: _____

Telephone: _____

Email: _____

Bid or Project: _____

1. **Business Location:** Provide street addresses or locations of your business for the past six months. Indicate if headquarters, distribution point, or locally-owned franchise.

_____

Addresses or Locations Headquarters, Distribution Point, or Franchise

2. **Business License:** Provide issuing jurisdiction and number of local business license and attach a copy. Indicate if no license is required.

_____

Jurisdiction License number

3. **Business Employment:** Provide the name and street address of one full-time employee or names and street addresses of two part-time employees employed by your business. If your business has no employees, provide the names and street addresses of local business owners that own 50% or larger share of business.

	Name 1	Name 2
Name:		
Street:		
City, State, ZIP:		
Full, Part Time, or Share:		

Certification: I acknowledge I have read and understand the criteria for contracting preferences as defined under Chapter 3.26 of the Bishop Municipal Code. I swear and affirm under penalty of perjury that the above information is true and correct and that the business listed above is qualified and eligible to receive a local preference. Bishop Municipal Code available at www.cityofbishop.com or at City Hall.

_____

Signature Title Date

Agreement

THIS AGREEMENT, made and entered into by and between the

City of Bishop, California

hereinafter referred to as "CITY" and

_____

a corporation under the laws of the state of _____;

hereinafter referred to as "CONTRACTOR".

CITY and CONTRACTOR agree as follows:

1. SCOPE OF WORK: Contractor shall furnish all materials and shall perform all of the work for the construction of the West Jay Street Extension in accordance with this agreement and the other contract documents.

2. TIME FOR COMPLETION: The work shall be completed within the times set forth in the contract documents. Time is of the essence and forfeiture due to delay will be assessed as provided for in the contract documents.

3. CONTRACT SUM: CITY will pay CONTRACTOR as described in the Contractor bid and the rest of the contract documents.

4. PAYMENTS: Payment will be made in accordance with the contract documents. The filing of the notice of completion by CITY shall be preceded by acceptance of the work made only by an action of the City Council.

5. COMPLIANCE WITH PUBLIC CONTRACTS LAW: CITY is a public agency in the State of California and is subject to the provisions of law relating to public contracts. It is agreed that all provisions of law applicable to public contracts are a part of this contract to the same extent as though set forth herein and will be complied with by CONTRACTOR.

6. CONTRACT DOCUMENTS: The complete contract includes all of these documents:

   - Notice to Bidders
   - Bid Form
   - Agreement
   - Performance Bond

- Payment Bond
- Worker's Compensation Certificate
- Special Provisions
- Other referenced documents

This Agreement is executed by the CITY pursuant to an action of its Governing Body in session on _____, authorizing the same, and CONTRACTOR has caused this Agreement to be duly executed.

Dated:
_____By_____
City Administrator

Dated:
_____By_____
(Contractor)
Title:
_____

APPROVED AS TO FORM:

_____
City Attorney

Performance Bond
(100% of the Agreement Amount)

We, _____as Principal,

and _____as Surety, jointly and severally, bind ourselves, our heirs, representatives, successors and assigns, as set forth herein to the

City of Bishop

(herein called City) for payment of the penal sum of _____
_____
_____ Dollars ($_____), lawful money of the United States. City has awarded Principal a contract for the construction of

West Jay Street Extension

The condition of this obligation is such that if the Principal shall in all things abide by and well and truly keep and perform the covenants, and agreements in the said contract, and any alteration thereof made as therein provided, on his part to be kept and performed at the item and in the manner therein specified, and shall faithfully fulfill the one-year guarantee of all materials and workmanship, and shall indemnify and save harmless the City, the Engineer/Architect, the City's Representative, and their consultants, and each of their directors, officers, employees, and agents, as therein stipulated, this obligation shall become null and void, otherwise, it shall be and remain in full force and effect.

Surety agrees that no change, extension of time, alteration, or addition to the terms of the contract, or the work to be performed thereunder, or the plans and specifications shall in any way affect its obligation on this bond, and it does hereby waive notice thereof.

Principal and Surety agree that should Owner become a party to an action on this bond, that each shall pay Owner's reasonable attorney's fees incurred therein in addition to the sum above set forth.

Executed in two original counterparts on _____, 20____

_____
PRINCIPAL

(Seal of Corporation) By _____

Title _____

Any claims under this bond may be addressed to:

_____ (Name and address of Surety)

_____

_____

_____

_____

_____ (Name and address of Surety's agent for service of process in California, if different from above)

_____

_____

_____ (Telephone number of Surety's agent in California)

(Attach Acknowledgement)

_____
SURETY

By_____
(Attorney-in-Fact)

APPROVED:

_____
(Attorney for CITY)

Payment Bond

(100% of the Agreement Amount)

We, _____as Principal,

and _____as Surety, jointly and severally, bind ourselves, our heirs, representatives, successors and assigns, as set forth herein to the

City of Bishop

(herein called City) for payment of the penal sum of _____ _____ _____ Dollars ($_____), lawful money of the United States. City has awarded Principal a contract for the construction of

West Jay Street Extension

If Principal or any of his subcontractors fails to pay any of the persons named in Section 3181 of the California Civil Code, or amounts due under the Unemployment Insurance Code with respect to work or labor performed under the contract or during the one-year guarantee period, or for any amounts required to be deducted, withheld, and paid over to the Franchise Tax board from the wages of employees of the contractor and his subcontractors pursuant to Section 13020 of the Unemployment Insurance Code, with respect to such work and labor, then Surety will pay the same in an amount not exceeding the sum specified above, and also will pay, in case suit is brought upon this bond, such reasonable attorney's fees as shall be fixed by the court.

This bond shall insure to the benefit of any of the persons named in Section 3181 of the California Civil Code, so as to give a right of action to them or their assigns in any suit brought upon this bond.

Surety agrees that no change, extension of time, alteration, or addition to the terms of the contract, or the work to be performed there under, or the plans and specifications shall in any way affect its obligation on this bond, and it does hereby waive notice thereof.

Principal and Surety agree that if the City is required to engage the services of an attorney in connection with the enforcement of this bond, each shall pay City's reasonable attorney's fees incurred with or without suit, in addition to above sum.

Executed in two original counterparts on _____, 20____

_____
PRINCIPAL

(Seal of Corporation) By _____

Title _____

Any claims under this bond may be addressed to:

_____ (Name and address of Surety)

_____

_____

_____

_____

_____ (Name and address of Surety's agent for service of process in California, if different from above)

_____

_____

_____ (Telephone number of Surety's agent in California)

(Attach Acknowledgement)

_____
SURETY

By_____
(Attorney-in-Fact)

APPROVED:

_____
(Attorney for CITY)

Special Provisions

A. GENERAL PROVISIONS

1. GENERAL

Unless otherwise stated, the work embraced herein shall be done in accordance with the 2015 Standard Specifications and the Standard Plans of the State of California, Department of Transportation insofar as the same may apply and in accordance with these Special Provisions. Copies of the Standard Plans and the Standard Specifications may be obtained from the Department of Transportation. In addition the City of Bishop Specifications for Domestic Water and Sanitary Sewer System (1991) shall also apply. Copies may be obtained from the City of Bishop Public Works Department.

When approved by the Engineer, forms, documents, and standards equivalent to those specified may be used.

In the event of conflict between these Special Provisions, the project plans, the City of Bishop Specifications for Domestic Water and Sanitary Sewer System, the Standard Specifications, and the Standard Plans the order of precedent shall be these Special Provisions over the project plans over the technical specifications of the City of Bishop Specifications for Domestic Water and Sanitary Sewer System over the Standard Specifications over the remaining sections of the City of Bishop Specifications for Domestic Water and Sanitary Sewer System over the Standard Plans.

2. GLOSSARY

All definitions and terms in Section 1-1.07B, Glossary, of the Standard Specifications shall apply, except whenever the following terms are used the intent and meaning shall be as follows.

Bid Item List: The bid form corrected for math errors.
Contract: Executed agreement between the City and Contractor.
Contract Documents: The documents which make up the Contract, including any and all documents incorporated therein; also, any and all written agreements between the City and Contractor which amend or change the Contract. Referred to as the Bid Book in the Standard Specifications.
City: The City of Bishop, State of California, working through its Public Works Department.
Department: The Public Works Department of the City of Bishop.
Director: The Public Works Director of the City of Bishop.
Department of Transportation: The Public Works Department of the City of Bishop, except when Department of Transportation publications are cited, such cites are to remain as written and refer to the State of California, Department of Transportation, also known as Caltrans.
Engineer: The Public Works Director of the City of Bishop, acting either directly or through properly authorized agents, such agents acting within the scope of the particular duties delegated to them.

Laboratory: The Laboratory of the Public Works Department or other laboratories authorized by the Public Works Department of the City of Bishop to test materials and work involved in the Contract.
Office Engineer: The Public Works Director of the City of Bishop.
Owner: The City.
State or State of California: The City except when State publications or standards are cited, such cites are to remain as written and refer to the State of California.

3. CHANGES TO STANDARD SPECIFICATIONS

The following sections are deleted from the Standard Specifications:
2-1.02, Bid Ineligibility
2-1.06, Bid Documents
2-1.18, Small Business and Non-Small Business Subcontractor Preferences
2-1.27, California Companies
2-1.33D, Opt Out of Payment Adjustments for Price Index Fluctuations
3-1.08, Small Business Participation Report
3-1.11, Payee Data Record,

Delete the numbered list in Section 3-1.18, Contract Execution

Deleted the second and third paragraphs of Section 2-1.33A, Bid Document Completion - General.

Modify Section 5-1.23, Submittals, to identify each sheet by the project name.

Delete the column "Umbrella or excess liability" from Liability Limits table of Section 7-1.06D(2), Liability Limits / Additional Insureds.

4. PROPOSAL REQUIREMENTS

The bidder's attention is directed to the provisions in Section 2, Bidding, of the Standard Specifications and these special provisions for the requirements and conditions which the bidder must observe in the preparation and the submission of the bid. Subcontracting Request forms are not required but each proposal shall list the portion of work that will be done by each subcontractor. A sheet for listing the subcontractors is included in the Proposal.

The contractor or subcontractor shall not discriminate on the basis of race, color, national origin, or sex in the performance of this contract.

5. INSURANCE

In addition to other insurance provisions, the Workers' Compensation policy shall be endorsed with a waiver of subrogation in favor of the County of Inyo, its agents, officers, employees and volunteers.

6. HOLD HARMLESS

In addition to other hold harmless provisions, the contractor shall hold harmless, defend and indemnify Inyo County its officers, officials, employees, and volunteers from and against all claims, damages, losses and expenses including attorney fees arising out of the performance of the work described herein, caused in whole or in part by any negligence act or omission of the City of Bishop, except where caused by the active negligence or willful misconduct of Inyo County its officers, officials, employees and volunteers.

7. BONDS

The Contractor, simultaneously with the execution of the contract, shall furnish a payment bond in an amount equal to 100 percent of the contract amount, or equivalent cash or security in lieu of bonds pursuant to Section 995.710 of the Code of Civil Procedures. Bonds shall be furnished by surety companies satisfactory to the City on the forms furnished as part of the contract documents. Surety companies, to be acceptable to the City, must be authorized to do business and have an agent for service of process in California.

8. SCOPE OF WORK

The scope of the work shall consist of the reconstruction of a sewer trunk as described in the contract documents for the **West Jay Street Extension** and as provided in the improvement plans.

9. PRE-CONSTRUCTION CONFERENCE

Prior to issuance to the Notice to Proceed, the City will hold a pre-construction conference for the purpose of discussing essential matters pertaining to the pursuit of the satisfactory completion of the project. The Contractor's representatives at this conference shall include all major superintendents for the work and may include subcontractors.

10. CONSTRUCTION STAKES

The Contractor shall request staking by notifying the Engineer at least 7 working days before the staking will be required. The cost of all re-staking shall be paid by the contractor. Construction staking will consist of stakes at 25 foot intervals along layout line. Contractor shall be responsible for layout of improvements from these stakes.

11. SUBMITTALS

In addition to submittals required in the Standard Specifications and elsewhere in these Special Provisions, the Contractor shall submit the following information to the City 7 working days prior to beginning of work for review and approval.

a) A schedule of work conforming to Section 8-1.02B, Level 1 Critical Path Model Schedule, of the Standard Specifications.
b) A health and safety plan.
c) Traffic control plan.

Each submittal shall include a cover sheet clearly describing the purpose of the submittal and containing a statement that the contractor each page of submittals shall include a statement the contractor has examined and verified all field dimensions and measurements, field construction criteria, materials, and similar data, and they meet the requirements for the

project. Submittals shall provide sufficient information to determine that the item is in compliance with the requirements.

12. PERMITS AND LICENSES

The following permits and licenses are known to be required for the work:

a) City of Bishop Business License
b) California Contractors License Classification A
c) Caltrans Encroachment Permit.

13. TIME OF COMPLETION

The Contractor shall have 45 working days to complete the work.

14. LIQUIDATED DAMAGES

Liquidated damages shall be $500 per day.

15. MEASUREMENT AND PAYMENT

All work will be measured and paid for as shown on the bid form and the contract documents.

Item quantities shall be measured by planned, actual, or lump sum in accordance with these special provisions. Item quantities to be measured for payment by planned quantities shall be based on theoretical or calculated quantities of completed work based on the plans. Item quantities to be measured for payment by actual quantities shall be determined by measurement of completed work.

The price paid for bid items shall include full compensation for furnishing all labor, materials, tools, equipment, and incidentals, and for doing all the work involved in completing those items of work complete in place in accordance with the contract documents.

When the contract does not include a contract pay item for work required by the contract, full compensation for that work is included in the prices paid for the contract pay items included in the contract.

The Contractor with assistance from the City shall, on or before the tenth day of each calendar month after construction work is started, cause an estimate in writing to be made of the value of the work completed.

A request for payment shall be submitted by the Contractor each month and upon completion of all work for approval and payment by the City.

The City shall retain 10 percent of the estimated value of the work done and 10 percent of the value of materials so estimated to have been furnished and delivered and unused or furnished and stored as aforesaid as part security for the fulfillment of the contract by the Contractor, except that at any time after 20 percent of the work has been completed, if the Engineer finds that satisfactory progress is being made, the City may reduce the total amount being retained

from payment pursuant to the above requirements to 5 percent of the estimated value of the work and materials and may also reduce the amount retained from any of the remaining partial payments to 5 percent of the estimated value of the work and materials. In addition, on any partial payment made after 95 percent of the work has been completed, the Department may reduce the amount withheld from payment pursuant to the requirements of this section to such lesser amount as the Department determines is adequate security for the fulfillment of the balance of the work and other requirements of the contract, but in no event will that amount be reduced to less than 125 percent of the estimated value of the work yet to be completed as determined by the Engineer.

Attention is directed to the provisions in Sections 10262 and 10262.5 of the Public Contract Code concerning prompt payment to subcontractors.

16. RESOLUTION OF CLAIMS

All public works claims between the Contractor and City relating to this contract where the total claims of both parties are equal or less than $375,000 shall be resolved in accordance with Public Contract Sections 20104 et seq., which are incorporated herein by reference. There shall be no claims for labor compliance issues.

17. TRAFFIC CONTROL

The contractor's traffic control plan shall include, but not be limited to, the following:

- Construction signing
- Types and location of traffic control devices
- Draft notification letters

The plan shall conform to the California Manual of Uniform Traffic Control Devices.

Traffic control affecting Highway 395 (South Main Street) shall be in accordance with the Caltrans permit issued for the work. It is anticipated Caltrans will require that the project be "double permitted" with one permit issued to the city and one to the contractor.

The City Engineer will review the submittal and provide written comments on the proposed plan. Upon resolution of issues the Engineer shall accept the plan in writing.

Acceptance by the Engineer of a traffic control plan shall in no way relieve the Contractor of his responsibility for safety. Acceptance of the traffic control plan by the City Engineer indicates that the plan generally appears to conform to the contract requirements. Such acceptance shall in no way be construed as confirmation of the technical accuracy or adequacy of the contents of the plan and shall not relieve the Contractor of the obligation to institute traffic control measures in full compliance with contract requirements, and which function safely and correctly, and are in conformance with applicable statutes, ordinances, and regulations.

<u>Notifications:</u> Draft notifications to properties shall be submitted to the Engineer for review and approval before Contractor distributes notices. The Contractor shall submit a copy to the Engineer of all notifications delivered.

The Contractor shall prepare and deliver project information notices to all properties adjacent to the project to ensure properties receive the notices no less than 7 calendar days prior to beginning any construction. The notice will include:

- Impacts of construction to property
- General scope of project including description of project and limits, hours and days of operation, phasing information, lane closure, and parking restrictions
- Contractor contact and telephone number
- Other appropriate information requested by the Engineer.

When street and driveway closures are necessary, the Contractor shall notify the affected properties 3 working days prior to each closure event.

Flagging: Flagging shall be paid entirely by the contractor. Assigned flaggers must control traffic and warn public of any dangerous conditions results from work activities. All flaggers must maintain flagging apparel. Flaggers shall be used during active construction operations whenever one-way traffic control is used on a two-way street.

Drop Offs: All longitudinal drop-offs shall be delineated and signed. Where public traffic is exposed to longitudinal drop-offs greater than 4 inches during non-working hours temporary durable safety slopes 4 horizontal to every 1 vertical or flatter shall be constructed and maintained.

Phasing and Access Requirements: The following applies to West Jay Street between 14+00 and 18+00. The street may only be closed when construction operations are underway. Except at isolated locations, at least two smooth firm lanes at least 11 feet wide shall be open when construction operations are not underway. At isolated locations at least one smooth firm lane at least 11 feet wide shall be open when construction operations are not underway.

18. GENERAL SAFETY

Contractor shall transmit to the City copies of reports and other documents related to accidents and injuries encountered during this work. Where there is conflict between applicable safety orders, laws and regulations and policies, the more stringent measures shall apply.

19. CHEMICALS

The Contractor shall provide two copies of Material Safety Data Sheets to the City for all chemicals used during this project at least three days prior to bringing them on site. Use of all such chemicals and disposal of residues shall be in strict accordance with the printed instructions of the manufacturer.

If the Contractor encounters hazardous substances during this work, he shall immediately notify the City and the County Environmental Services Office. Hazardous substances shall be disposed of in accordance with the requirements of Inyo County Department of Environmental Health.

B. BID ITEMS

1. Mobilization
Mobilization shall be measured lump sum.

2. Erosion Control
Erosion Control shall include materials and labor necessary to prevent storm water pollution and shall include the installation of best management practices. Erosion control shall be measured lump sum and paid based on percentage of contract time expired.

3. Traffic Control
Traffic control shall be measured lump sum and paid based on percentage of contract time expired.

4. Remove Pavement
Remove Pavement shall be measured actual.

5. Remove Concrete
Remove Concrete shall be measured actual.

6. Irrigation
Irrigation shall follow Caltrans requirements and include 1 inch water service, backflow preventer device, irrigation valve, irrigation controller, trenching, supply line, and tree well sprinkler assembly at each tree (Caltrans Standard Plan H4). Irrigation shall be measured actual.

7. Inlet
Inlet shall be Caltrans Type GO with bicycle proof grate. Inlet shall include construction of gutter depression. Curb Inlet shall be measured actual.

8. Storm Drain
Storm Drain Line shall be Type S plastic pipe, smooth interior wall, or conform to special provisions for sewer pipe. Storm drain shall be measured actual.

9. Storm Drain Manhole and Sewer Manhole
Manhole shall be a new manhole and conform to City of Bishop Standard Detail S-1. Manhole shall include frame and cover per City of Bishop Standard Detail S-2, except "SEWER" shall be replaced with "STORMDRAIN" in the case of Storm Drain Manhole. Manhole shall be measured actual.

10. Sidewalk
Sidewalk shall include subgrade preparation, grading including removal of excess material and import of needed material, 4 inches of aggregate base, and matching existing grades behind sidewalk that may require either cutting or filling to provide a smooth transition. Sidewalk shall be poured monolithically with curb. Expansion joints in Sidewalk shall be

placed at not more than 60 foot intervals. Driveways, curb ramps, and tree wells shall not be included in the measurement of sidewalk. Sidewalk shall be measured actual.

11. Driveway
Driveways shall be commercial driveways (6 inches thick). Driveway shall include 4 inches of aggregate base, and matching existing grades behind driveways that may require either cutting or filling to provide a smooth transition. The "Var" dimension shown along the curb face on the Caltrans Standard Plan detail for driveways shall be modified to be a constant 3 feet thereby reducing the 45 degree angle shown on the detail. Driveways shall be measured between points where curb is full height on either side of each driveway at the front, shall be measured by actual width at the back and shall be measured to include the flared areas near the curb. Driveways shall be measured actual, except maximum slopes shall be assumed.

12. Curb
Curb shall include subgrade preparation, placement and compaction of 6 inch aggregate base. Expansion joints in curb shall be placed at not more than 60 foot intervals. No deduction for driveways or curb ramps shall be made in the measurement of curb. Curb shall be measured actual.

13. Curb Ramp
Curb ramp shall include subgrade preparation and compaction, placement and compaction of 4 inches of aggregate base, and other concrete necessary to construct curb ramps. Curb ramp shall be poured monolithically with curb. Curb ramps shall be measured actual.

14. Aggregate Base
Aggregate base shall be measured actual.

15. Asphalt Concrete
Asphalt Concrete shall be measured actual.

16. Tree
The contractor shall plant trees per the City of Bishop Care Information available on the city website. Trees shall be healthy 15 gallon trees. The trees shall be healthy 15 gallon Desert Willow - Chitalpa tashkentensis. Trees shall be measured actual.

17. Water Line
Water Line shall be PVC and shall maintain a minimum 0.25 clearance to sewer pipes. The price paid for Water Line shall include valves, reducers, tees, elbows, blow offs, casings and other required fittings and materials, and shall include reconstruction of standard pavement section. Water Line shall be measured actual.

18. Hydrant
Fire hydrants shall conform to City of Bishop requirements and shall be measured actual.

19. Sewer Line
Sewer Line shall be measured actual.

20. Sewer Manhole
See Storm Drain Manhole, item 9.

A. MATERIALS AND GROUNDWATER

1. Portland Cement Concrete

Concrete shall be 711 Materials, Mix 650016F4, or equal.

2. Synthetic Fiber Reinforcement

The synthetic fibers specified shall conform to the requirements of ASTM C1116, Section 4.1.3 and Note 3, as well as International Conference of Building Officials Evaluation Service (ICBO ES) Acceptance Criteria 32, Sections 4.1.1 and 4.1.2. Both of these specifications apply to the use of synthetic fibers as secondary reinforcement in concrete. At the request of the project engineer the synthetic fiber vendor shall furnish a Letter of Certification stating compliance with these specifications and signed by a registered Professional Engineer.

Synthetic fibers shall be either nylon multifilament fiber or polypropylene collated fibrillated fiber or monofilament fiber.

Nylon multifilament or polypropylene monofilament fibers shall be introduced at the rate of 1 pound per cubic yard at the standard length of ¾ inch.

Polypropylene collated fibrillated fiber shall be introduced at the rate of 1.5 pounds per cubic yard at the standard length of ¾ inch.

Synthetic fibers shall be added at the concrete batch plant and mixed with the other ingredients for 3 to 5 minutes. The concrete producer shall list the type and quantity of synthetic fiber added on each delivery ticket.

3. Aggregate Base

Aggregate base shall be Class 2 and may be 100 percent reclaimed material.

4. Asphalt Concrete

Asphalt concrete shall be Type B. The grading of the aggregate on the top lift shall be 1/2 inch, maximum, medium. Asphalt binder shall be Grade PG 64-28 conforming to current California Department of Transportation specifications. Comparable commercial "cold mix" asphalt concrete suitable for the application may be used if approved in writing in advance by the engineer.

5. Sewer Line

Sewer Line shall be SDR 35 / PS 46 polyvinyl chloride (PVC) solid wall sewer pipe made of compounds conforming to ASTM D1784 and manufactured in accordance with the material requirements of ASTM D3034 or ASTM F679. Sewer pipe shall meet all dimensional, chemical, and physical requirements as outlined in ASTM D3034 and ASTM F679 or ASTM F679 ANNEX. Sewer pipe shall be installed according to the requirements of ASTM D2321. Joints shall meet the requirements of ASTM D3212 and shall be formed using a Rieber gasket system for sealing that meets the requirements of ASTM F477.

6. PVC Water Line

Water line shall be polyvinyl chloride (PVC) water distribution pipe conforming to American Water Works Association (AWWA) C900 Class 200 requirements with integral bell and spigot joints, shall meet the requirements of ANSI/NSF 61 "Drinking Water System Components - Health Effects", and shall be manufactured to cast iron outside diameters (CIOD) in accordance with AWWA C900. The bell shall consist of an integral thickened wall section with an elastomeric seal. The wall thickness in the bell section shall conform to the requirements of Section 6.2 of ASTM D3139, "Standard Specification for Joint for Plastic Pressure Pipes Using Flexible Elastomeric Seals". The seal shall meet the requirement of ASTM F477 "Standard for Elastomeric Seals (Gaskets) for Joining Plastic Pipe." Fittings and valves shall conform to the provisions of the Bishop Specifications.

7. Soils and Groundwater

Soils to about 5 feet below original ground are moderately loose organic clayey sands. Groundwater has been observed in an excavation at approximately 12+05, 10 feet left as follows:

Date	**Elevation**	**Comment**
May 2019	4,144.0	
2 August 2019	4,143.4	

Mandich Street

Legend

- City Limit
- Existing Water
- Existing Sewer
- Existing Sewer (ESCSD)
- Storm Drain

N

Feet

0 50 100 200

Original Scale 1 inch = 200 feet

South Fowler Street

Incorporated City of Bishop

Proposed building

Future building

Building under construction

West Jay Street

East Jay Street

Work Area

South Main Street

Unincorporated

City of Bishop Location Map

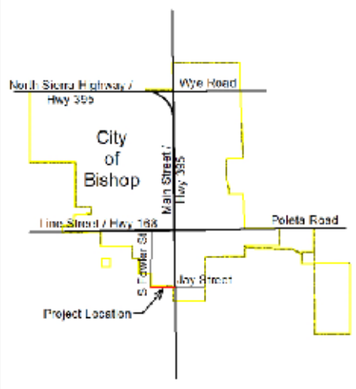

Project Location Map

17 August 2019

Director of Public Works

City of Bishop

Sheet 1 of 7

West Jay Street Extension Project - Overview

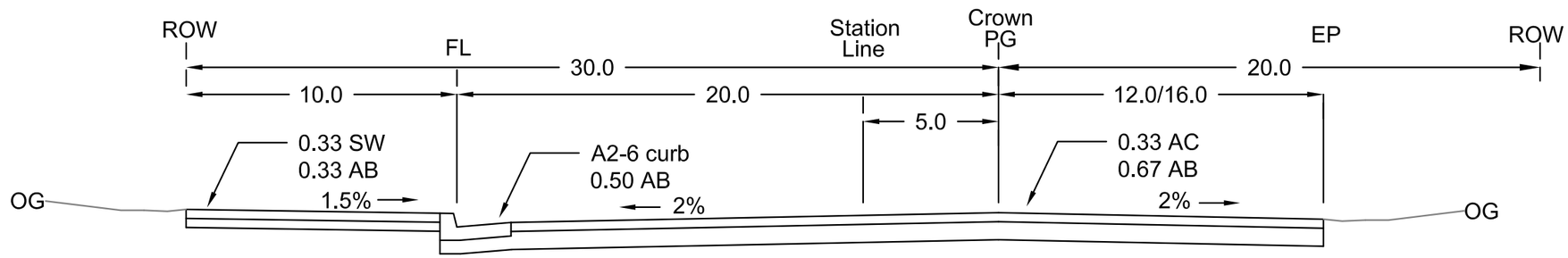

West Jay Street Cross Section

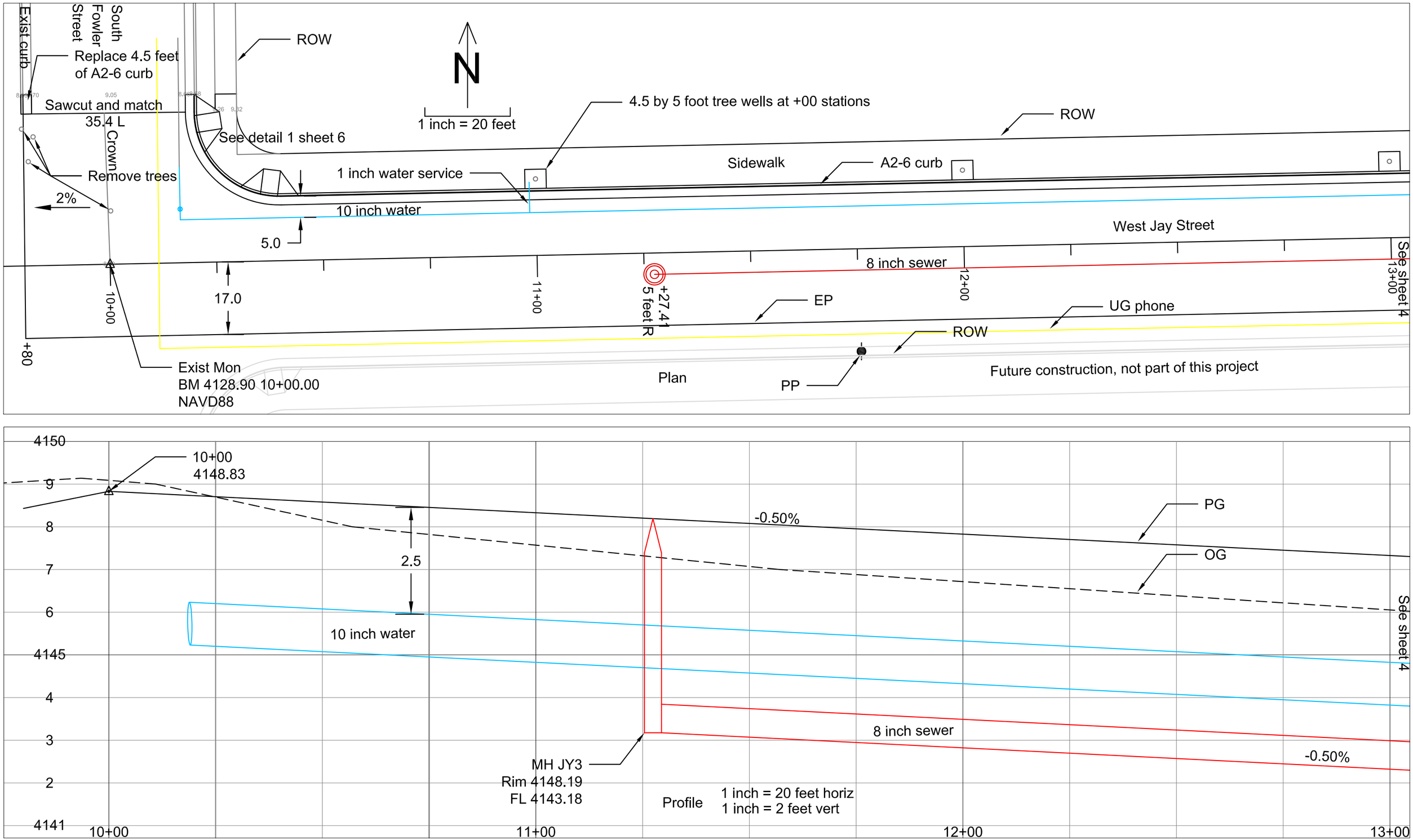
Exist curb
South Fowler Street
Replace 4.5 feet of A2-6 curb
ROW
N
1 inch = 20 feet
4.5 by 5 foot tree wells at +00 stations
ROW
Sawcut and match
35.4 L
Crown
See detail 1 sheet 6
Remove trees
2%
1 inch water service
Sidewalk
A2-6 curb
10 inch water
5.0
West Jay Street
8 inch sewer
See sheet 4
13+00
12+00
11+00
+27.41
5 feet R
EP
UG phone
ROW
17.0
10+00
+80
Exist Mon
BM 4128.90 10+00.00
NAVD88
Plan
PP
Future construction, not part of this project
4150
9
8
7
6
4145
4
3
2
4141
10+00
4148.83
-0.50%
PG
OG
2.5
10 inch water
See sheet 4
8 inch sewer
-0.50%
MH JY3
Rim 4148.19
FL 4143.18
Profile
1 inch = 20 feet horiz
1 inch = 2 feet vert
10+00
11+00
12+00
13+00

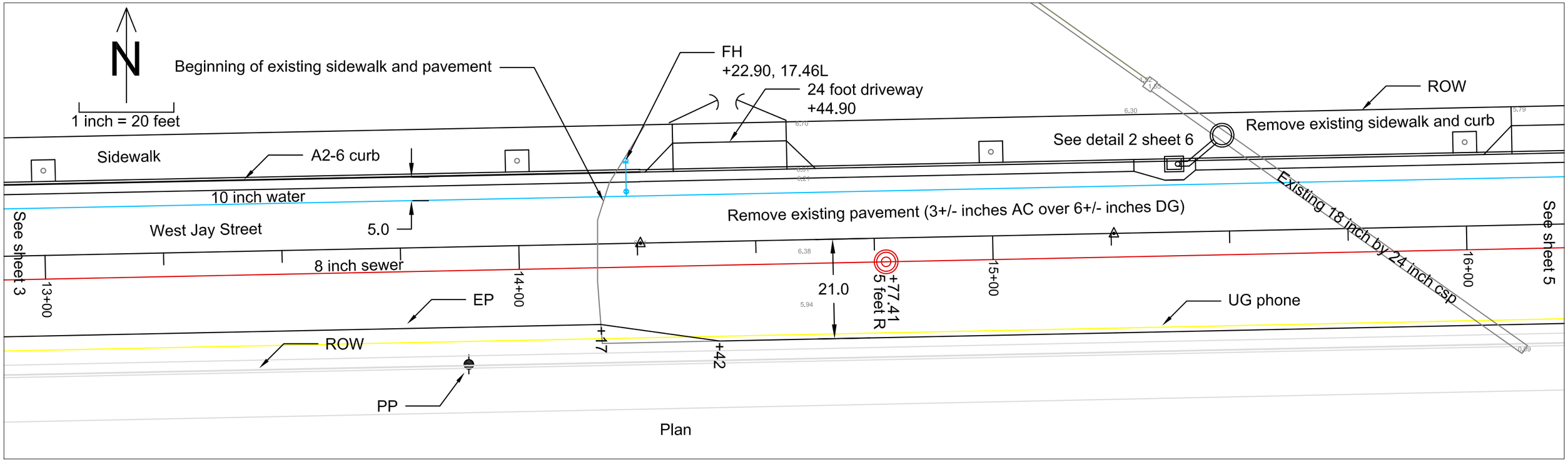

Plan

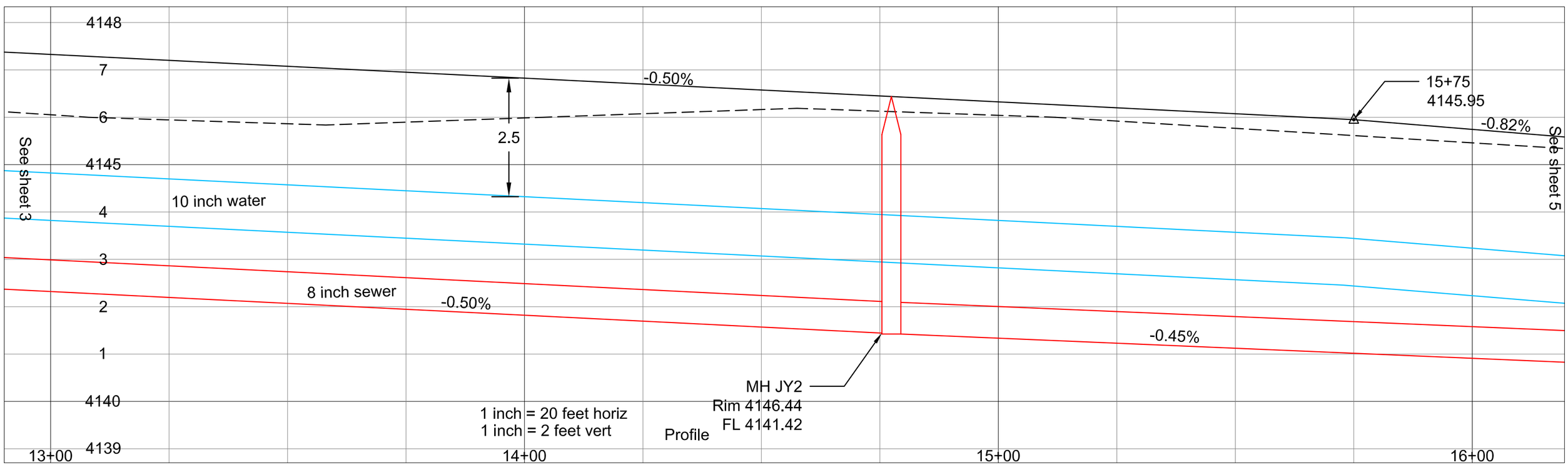

Profile

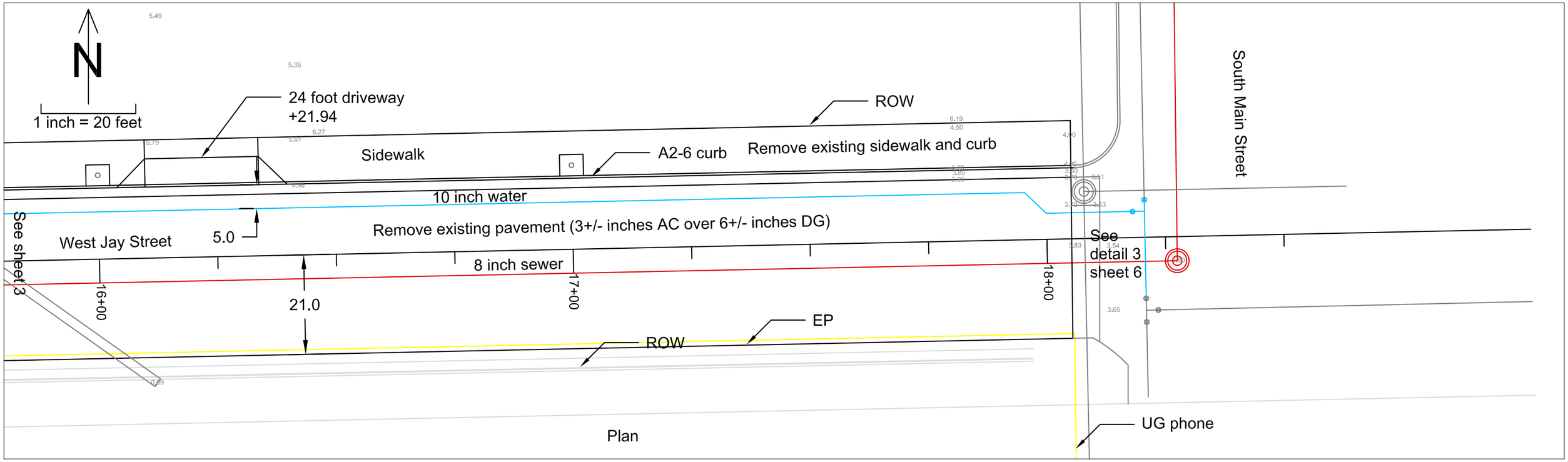
N
1 inch = 20 feet
24 foot driveway
+21.94
ROW
Sidewalk
A2-6 curb
Remove existing sidewalk and curb
South Main Street
10 inch water
Remove existing pavement (3+/- inches AC over 6+/- inches DG)
West Jay Street
5.0
See sheet 3
See detail 3 sheet 6
8 inch sewer
16+00
17+00
18+00
21.0
EP
ROW
UG phone
Plan

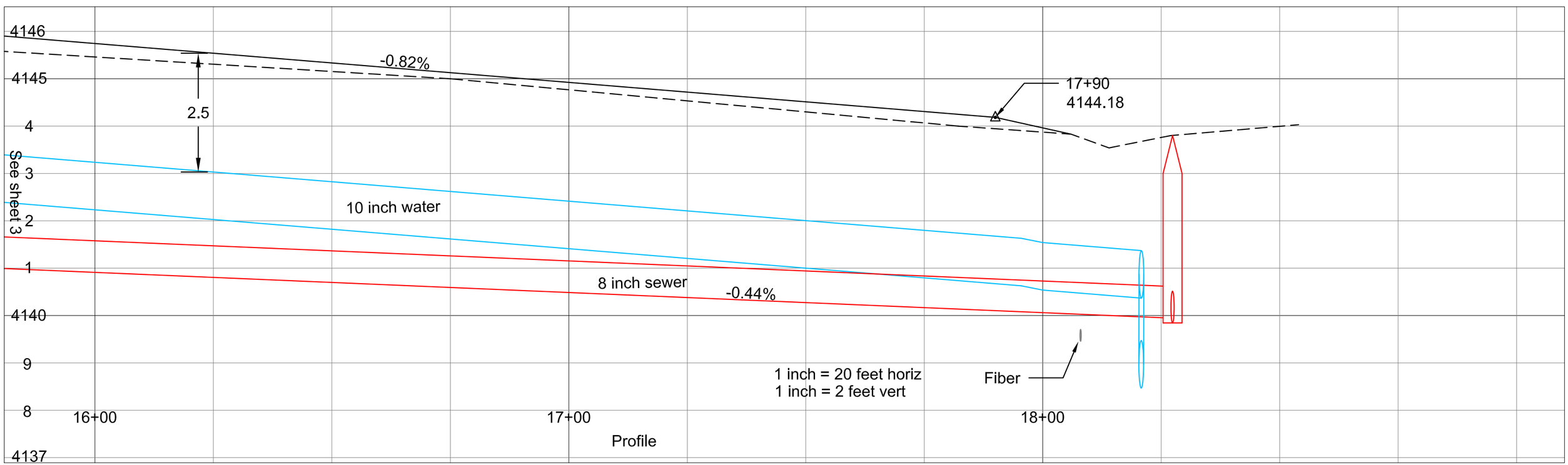
4146
4145
4
3
2
1
4140
9
8
4137
-0.82%
2.5
17+90
4144.18
See sheet 3
10 inch water
8 inch sewer
-0.44%
1 inch = 20 feet horiz
1 inch = 2 feet vert
Fiber
16+00
17+00
18+00
Profile

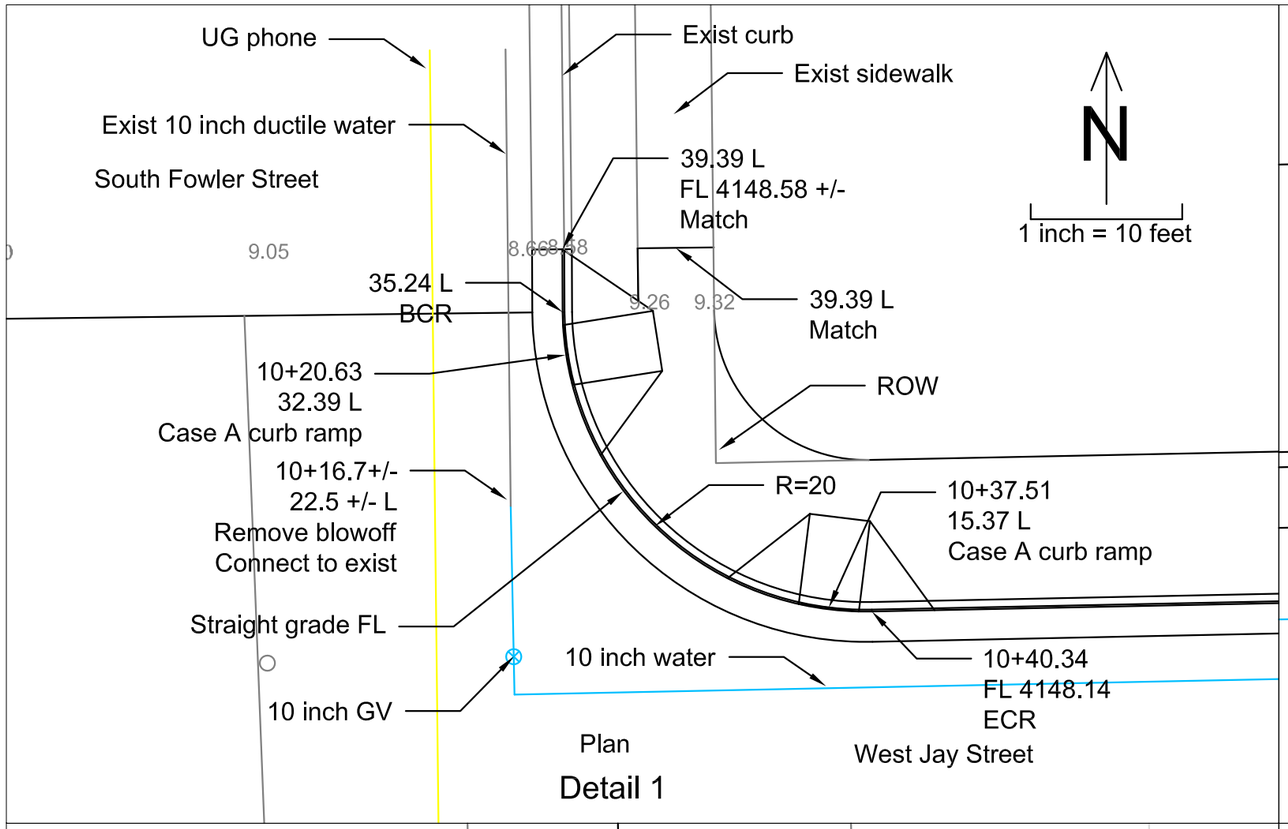

Detail 1

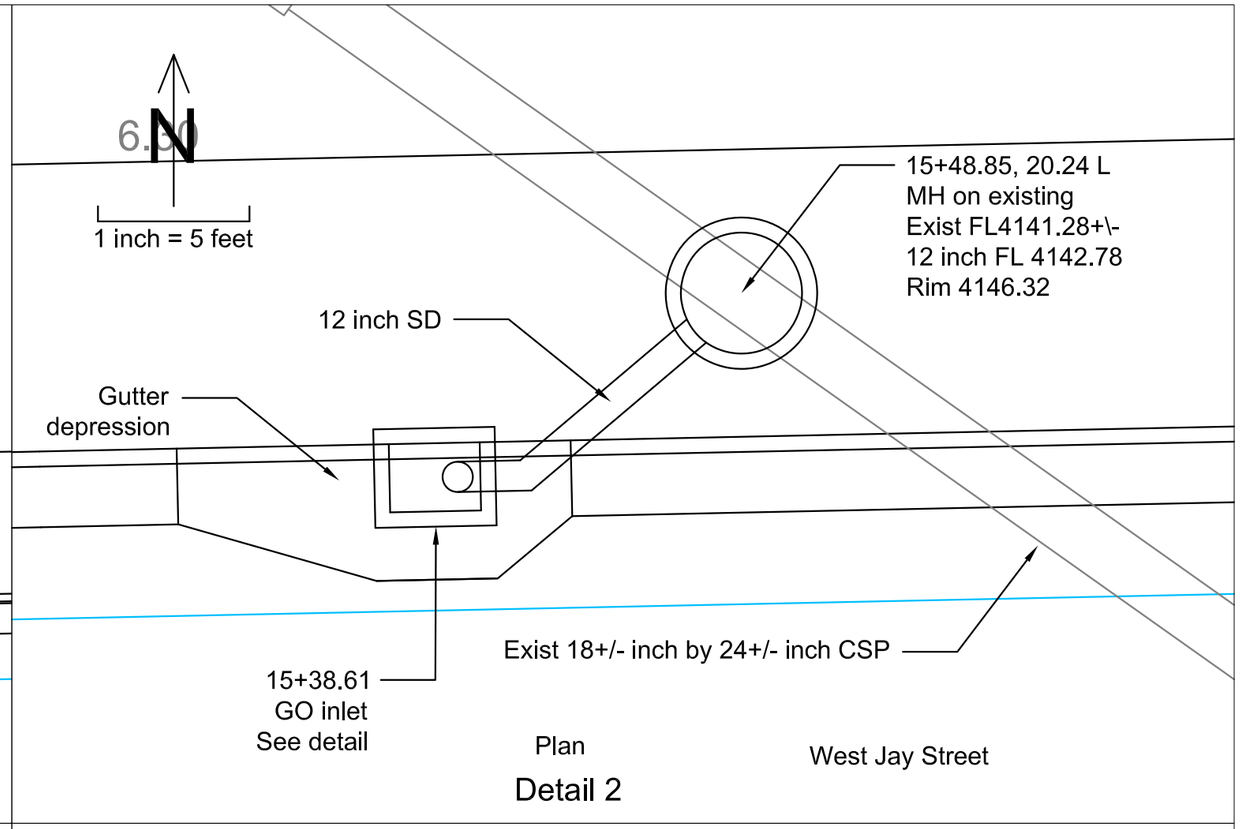

Detail 2

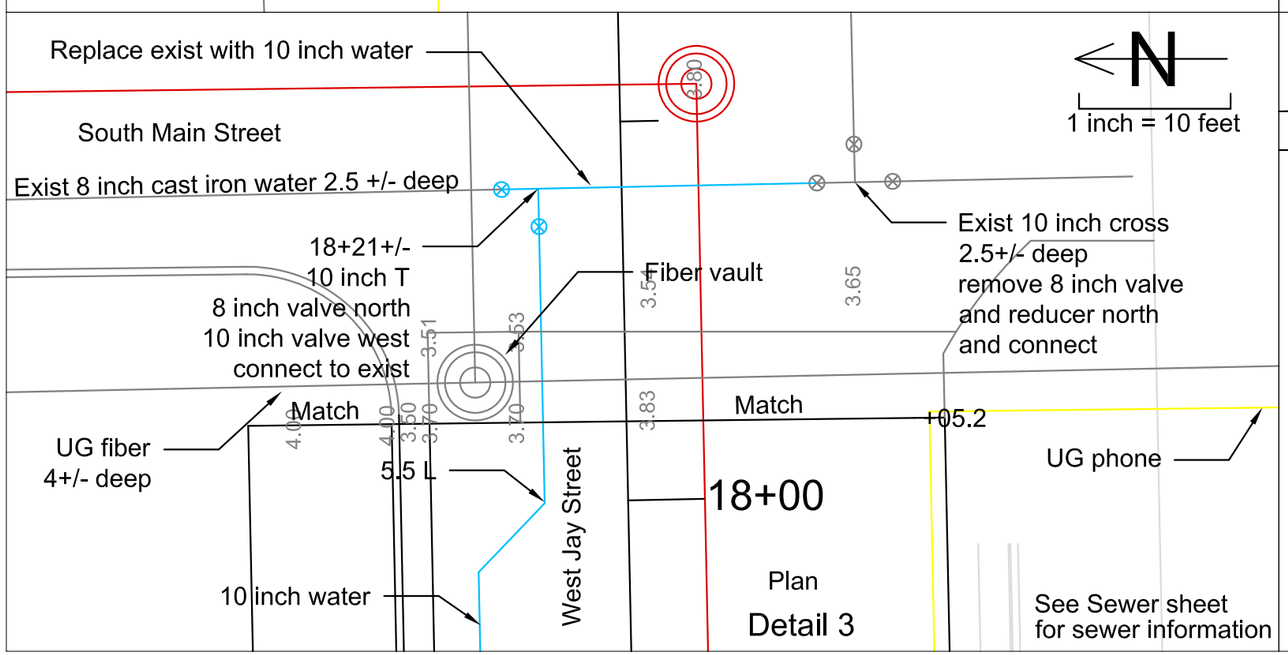

Detail 3

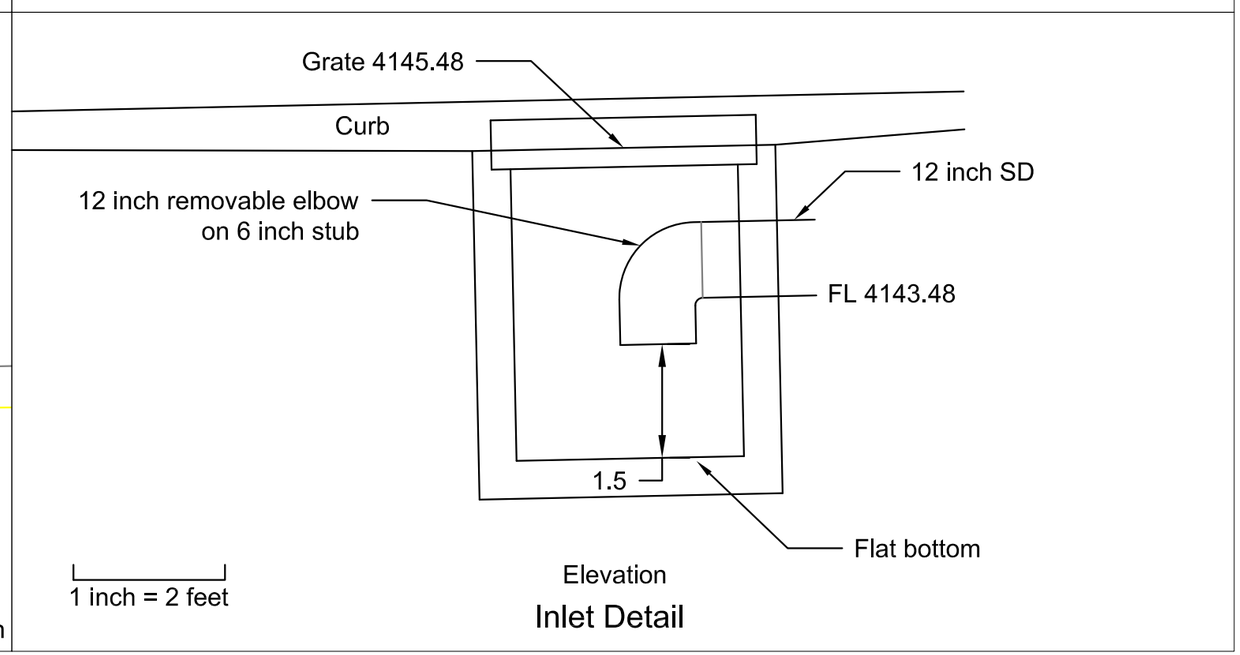

Inlet Detail

City of Bishop

Sheet 6 of 7

West Jay Street Extension Project - Details

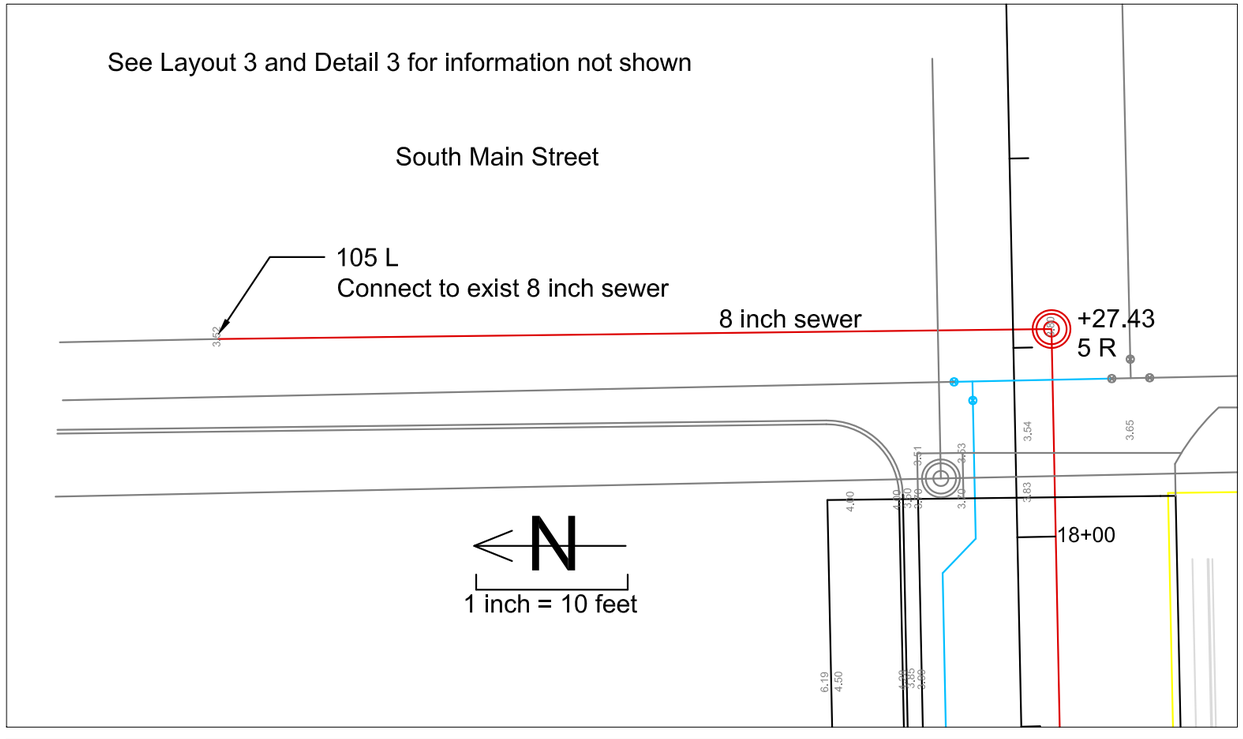
See Layout 3 and Detail 3 for information not shown
South Main Street
105 L
Connect to exist 8 inch sewer
8 inch sewer
+27.43
5 R
18+00
N
1 inch = 10 feet

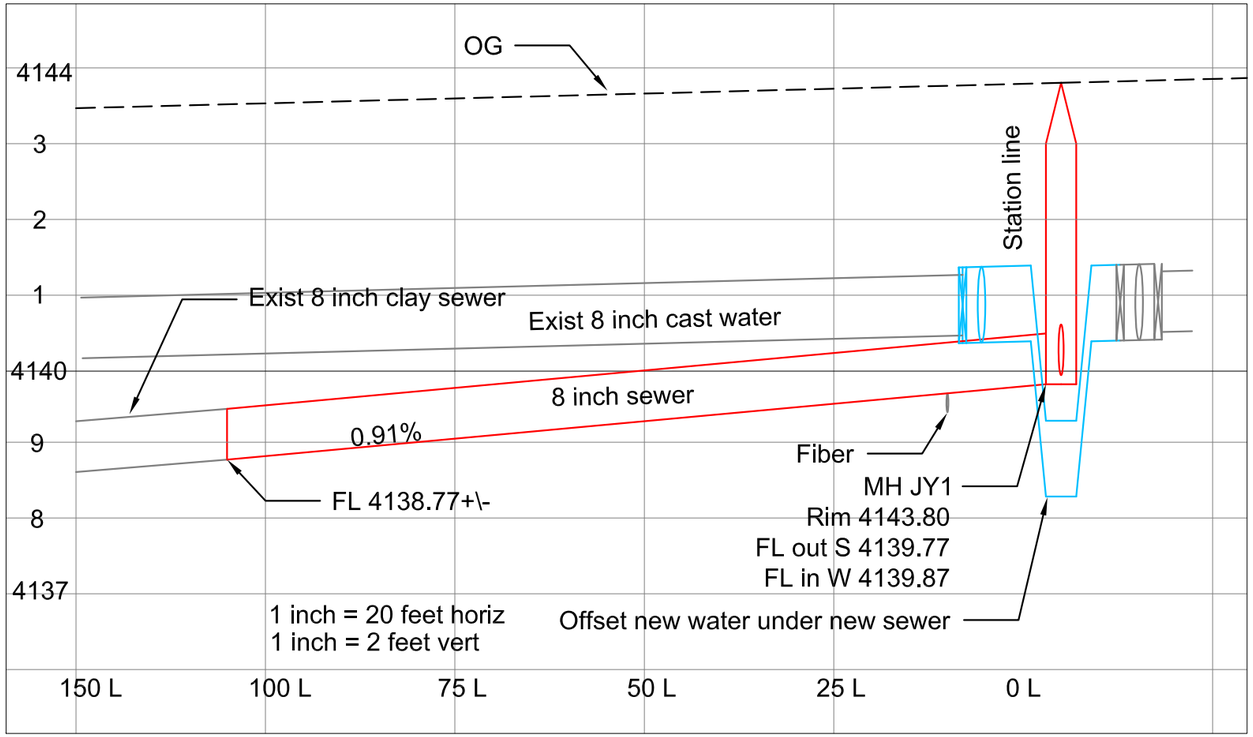
OG
4144
3
2
1
4140
9
8
4137
Station line
Exist 8 inch clay sewer
Exist 8 inch cast water
8 inch sewer
0.91%
FL 4138.77+\-
Fiber
MH JY1
Rim 4143.80
FL out S 4139.77
FL in W 4139.87
Offset new water under new sewer
1 inch = 20 feet horiz
1 inch = 2 feet vert
150 L
100 L
75 L
50 L
25 L
0 L

NOTES:

1. THE FOLLOWING APPLIES FOR WORK ACCOMPLISHED THROUGH EXCAVATION AND BACKFILL.
2. EXCEPT AS SHOWN, WORK SHALL BE IN ACCORDANCE WITH THE STATE OF CALIFORNIA DEPARTMENT OF TRANSPORTATION (CALTRANS) STANDARD SPECIFICATIONS.
3. BACKFILL SHALL BE AS FOLLOWS:

ZONE	MINIMUM COMPACTION	MINIMUM CALTRANS R VALUE	MATERIAL
STREET	95%	60	AS SHOWN AND NOTE 7
TRENCH	90%	60	NOTE 7
PIPE AND BEDDING	90%		NOTE 4

4. MATERIAL IN THE PIPE AND BEDDING ZONES SHALL BE SAND OR CRUSHED ROCK EXCEPT THAT CRUSHED ROCK SHALL NOT BE USED WITHIN 6 INCHES OF WATER LINES, UNLESS DIRECTED BY THE ENGINEER.
5. IN UNSUITABLE AREAS AS SHOWN ON THE PLANS OR DIRECTED BY THE ENGINEER, MINIMUM THICKNESS OF BEDDING SHALL BE 18 INCHES.
6. INSTALLATION OF MANHOLES AND OTHER IN-GROUND STRUCTURES IS SIMILAR.
7. SLURRY CEMENT BACKFILL MAY BE USED IN PLACE OF COMPACTED MATERIAL AND IN PLACE OF AGGREGATE BASE IN THE TRENCH ZONE AND THE STREET ZONE. NOT LESS THAN 70 POUNDS AND NOT MORE THAN 75 POUNDS OF CEMENT SHALL BE USED FOR EACH CUBIC YARD OF SLURRY CEMENT BACKFILL.
8. SAWCUT EXISTING ASPHALT TO A CLEAN STRAIGHT VERTICAL EDGE.
9. REPAVE TRENCH WITH 4" MIN. A.C. OVER 6" MIN. A.B. IN PAVED AREAS.

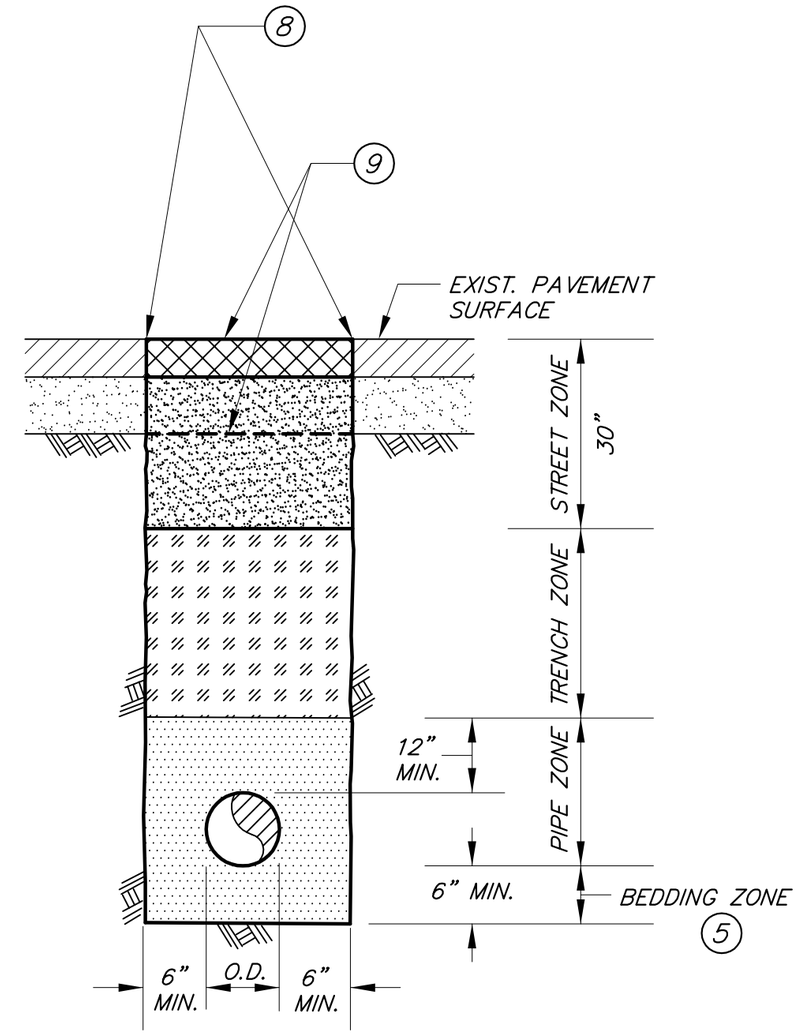

STANDARD DETAILS FOR PUBLIC WORKS CONSTRUCTION

PIPE BEDDING AND BACKFILL

CITY OF BISHOP
INTO COUNTY CALIFORNIA

APPROVED BY PUBLIC WORKS DIRECTOR

20 APRIL 2012
DATE

STANDARD DETAILS FOR PUBLIC WORKS CONSTRUCTION

PIPE BEDDING AND BACKFILL

DATE	REVISION	STANDARD DETAIL NO.
		WS-1

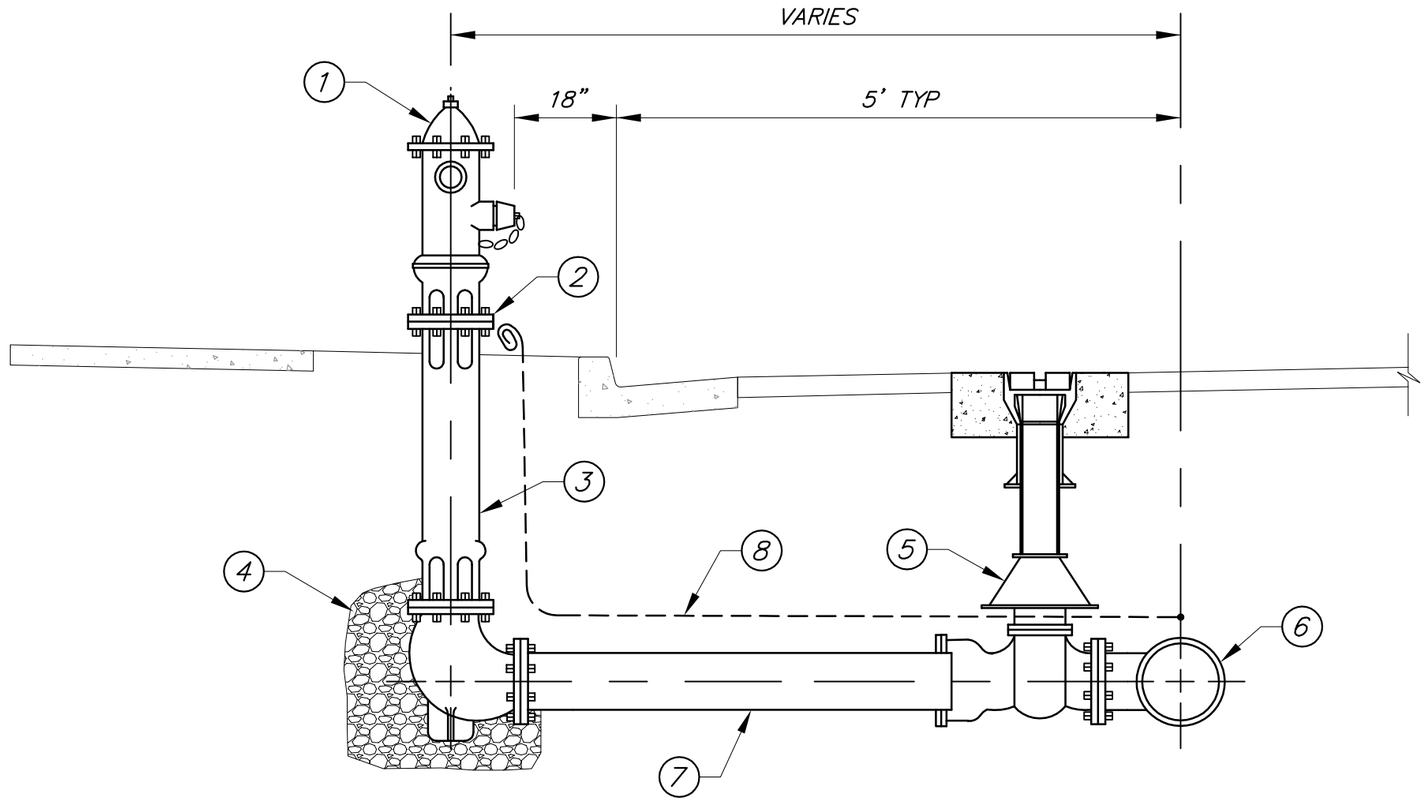

NOTES:

1. FIRE HYDRANT TO CONFORM WITH AWWA SPECIFICATION C-502, MUELLER, CENTURION, MJ, 5 1/4" MAIN VALVE OPENING, A-423 (DRY BARREL) WITH TWO 2 1/2" AND ONE 4" NS THREADED NOZZLES. ABOVE GROUND PORTION TO BE PAINTED SAFETY YELLOW.
2. SAFETY FLANGE, 3" TO 5" ABOVE SIDEWALK OR GROUND. PROVIDE BOLLARDS IN AREAS WITHOUT CURB.
3. BURIED PORTION OF HYDRANT TO BE COATED WITH COAL TAR ENAMEL OR COAL TAR EPOXY.
4. MINIMUM 7 CUBIC FEET OF CRUSHED ROCK AROUND DRAIN VALVES..
5. 6" FL x MJ GATE VALVE. SEE W-4 FOR VALVE BOX AND RISER.
6. WATER MAIN LINE.
7. 6" C900 WITH RESTRAINED JOINTS.
8. LOCATOR WIRE. CONNECT TO LOCATOR WIRE FOR WATER MAIN.

STANDARD DETAILS FOR PUBLIC WORKS CONSTRUCTION

FIRE HYDRANT ASSEMBLY

CITY OF BISHOP
100 Years of Service
INCORPORATED 1903
INYO COUNTY CALIFORNIA

APPROVED BY
PUBLIC WORKS DIRECTOR

20 APRIL 2012
DATE

STANDARD DETAILS FOR PUBLIC WORKS CONSTRUCTION

FIRE HYDRANT ASSEMBLY

DATE	REVISION	STANDARD DETAIL NO.
		W-1
		SCALE:
		NOT TO SCALE

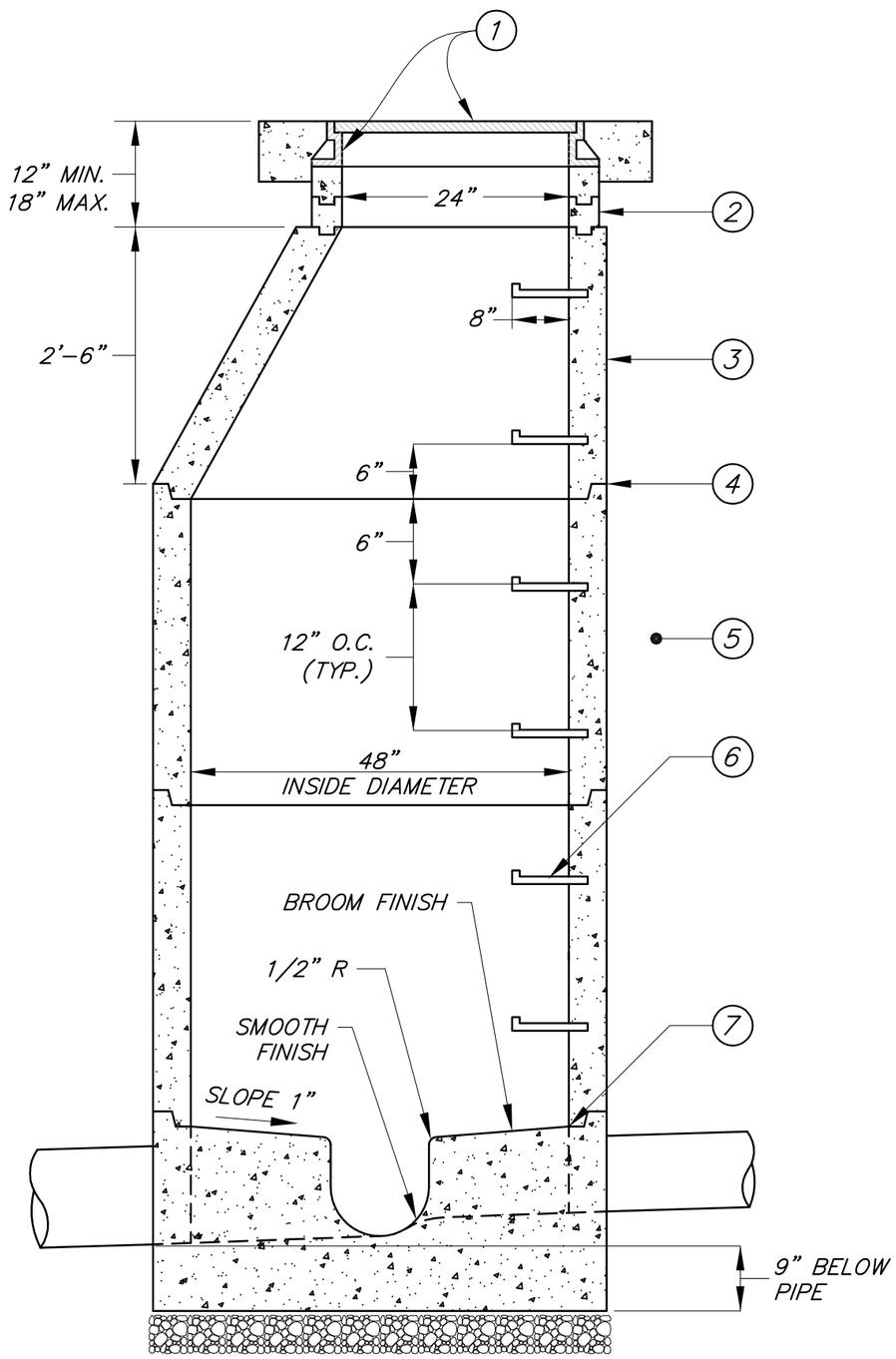

ELEVATION

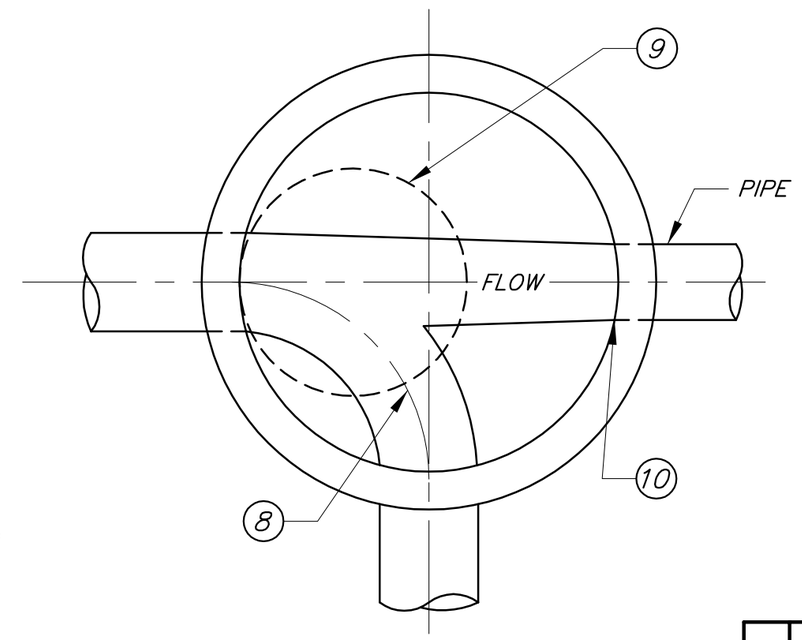

PLAN

NOTES:

1. SEE DRAWING S-2 FOR MANHOLE FRAME AND COVER DETAILS.
2. 24" DIAMETER GRADE RING SECTION AS NEEDED. MAXIMUM HEIGHT 6" PER SECTION.
3. ECCENTRIC CONE SECTION.
4. MORTAR BETWEEN SECTIONS TO FORM WATER TIGHT JOINTS.
5. FOR BACKFILL AND BEDDING REQUIREMENTS SEE TRENCH BACKFILL DETAILS WS-1.
6. POLYPROPYLENE COVERED MANHOLE STEPS (TYPICAL).
7. MATCH PIPE CROWNS UNLESS OTHERWISE SHOWN.
8. RADIUS = 2 x DIAMETER OF INLET.
9. MANHOLE OPENING OVER OUTLET.
10. PIPE FLUSH WITH INSIDE MANHOLE WALL.
11. PRECAST MANHOLE RINGS, CONES AND SECTIONS SHALL BE APPROVED BY THE CITY AND TO CONFORM TO ASTM C478.
12. MORTAR SHALL BE 1 PART CEMENT TO 4 PARTS SAND.
13. MANHOLES WITH A DEPTH GREATER THAN 10 FEET SHALL BE 60" INSIDE DIAMETER AND ENGINEERED DETAILS SHALL BE PROVIDED ON DESIGN PLANS.
14. CAST IN PLACE PARTS MAY BE USED IF APPROVED BY CITY.

STANDARD DETAILS FOR PUBLIC WORKS CONSTRUCTION

STANDARD MANHOLE

CITY OF BISHOP
100 Years of Service
INCORPORATED 1903
INYO COUNTY
CALIFORNIA

APPROVED BY
PUBLIC WORKS DIRECTOR

20 APRIL 2012
DATE

STANDARD DETAILS FOR PUBLIC WORKS CONSTRUCTION

STANDARD MANHOLE

DATE	REVISION	STANDARD DETAIL NO.
		S-1
		SCALE:
		NOT TO SCALE

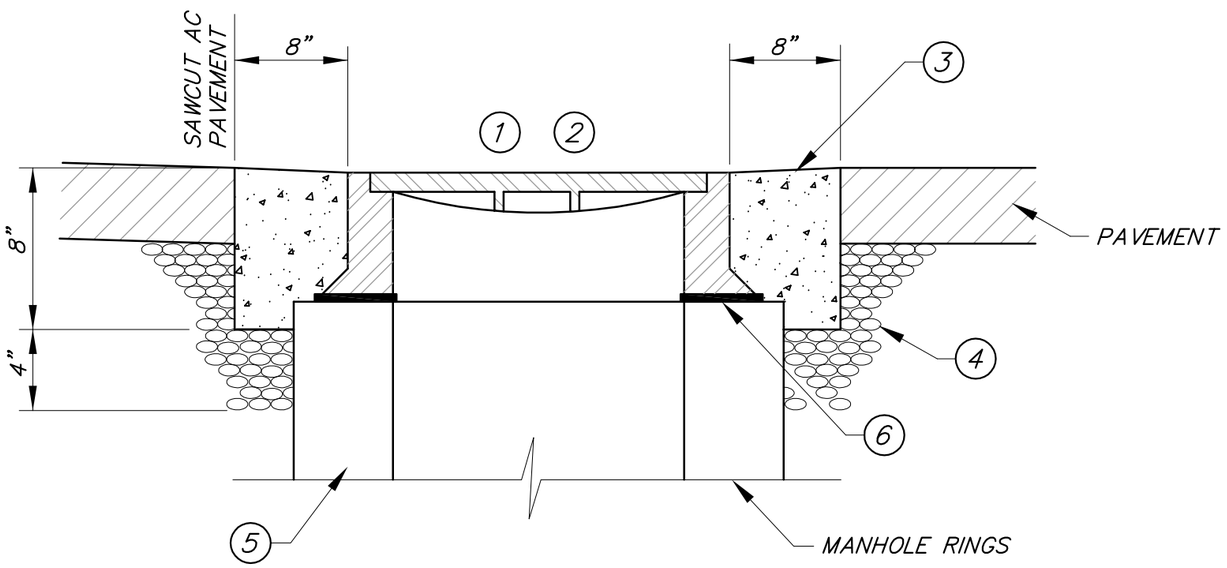

ELEVATION

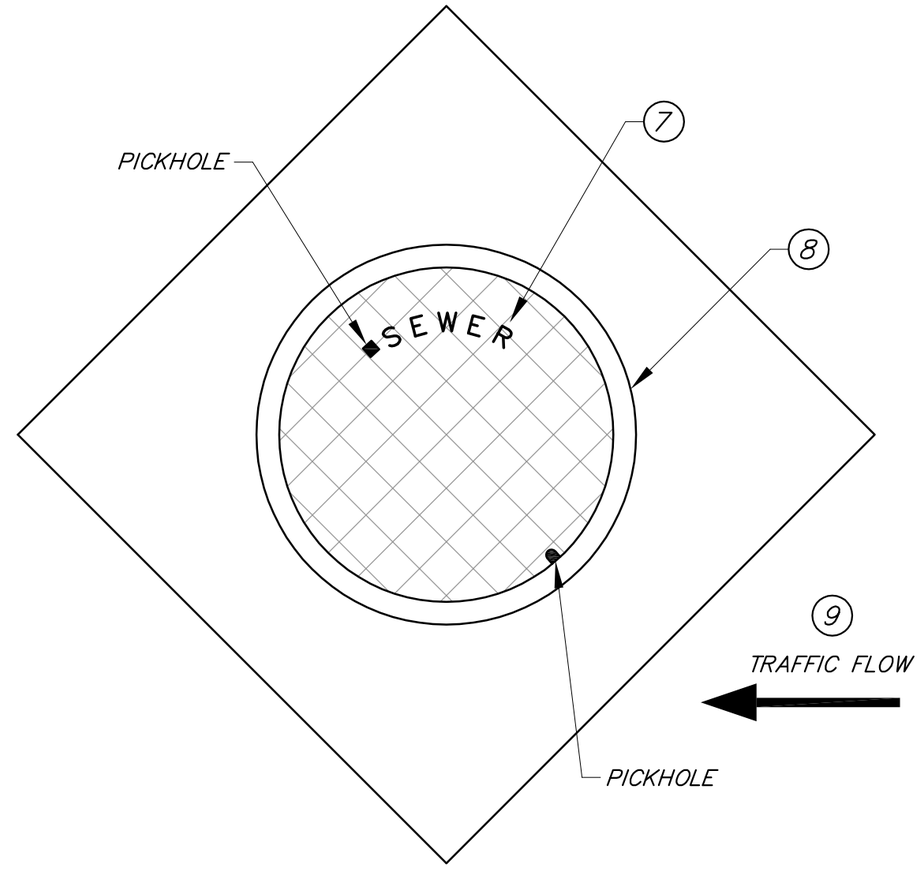

PLAN

NOTES:

1. GRADE OF FRAME AND COVER TO MATCH PAVEMENT GRADE.
2. DEPRESS FRAME AND COVER 1/4" BELOW PAVEMENT.
3. CLASS 1 CONCRETE COLLAR.
4. AGGREGATE BASE.
5. FOR MANHOLE DETAILS SEE DRAWING S-1.
6. 1/2" THICK CEMENT MORTAR. MORTAR SHALL BE 1 PART CEMENT TO 4 PARTS SAND.
7. LETTERING FOR MANHOLE SHALL BE 2" HIGH.
8. FRAME AND COVER SHALL BE D&L FOUNDRY A-1024 OR APPROVED EQUAL.
9. PLACE CONCRETE SUCH THAT NO EDGES ARE PERPENDICULAR TO THE DIRECTION OF THE TRAFFIC FLOW.

STANDARD DETAILS FOR PUBLIC WORKS CONSTRUCTION

MANHOLE FRAME AND COVER

CITY OF BISHOP — INCORPORATED 1903 — INYO COUNTY CALIFORNIA

APPROVED BY PUBLIC WORKS DIRECTOR

20 APRIL 2012

DATE

STANDARD DETAILS FOR PUBLIC WORKS CONSTRUCTION

MANHOLE FRAME AND COVER

DATE	REVISION	STANDARD DETAIL NO.
		S-2
		SCALE:
		NOT TO SCALE

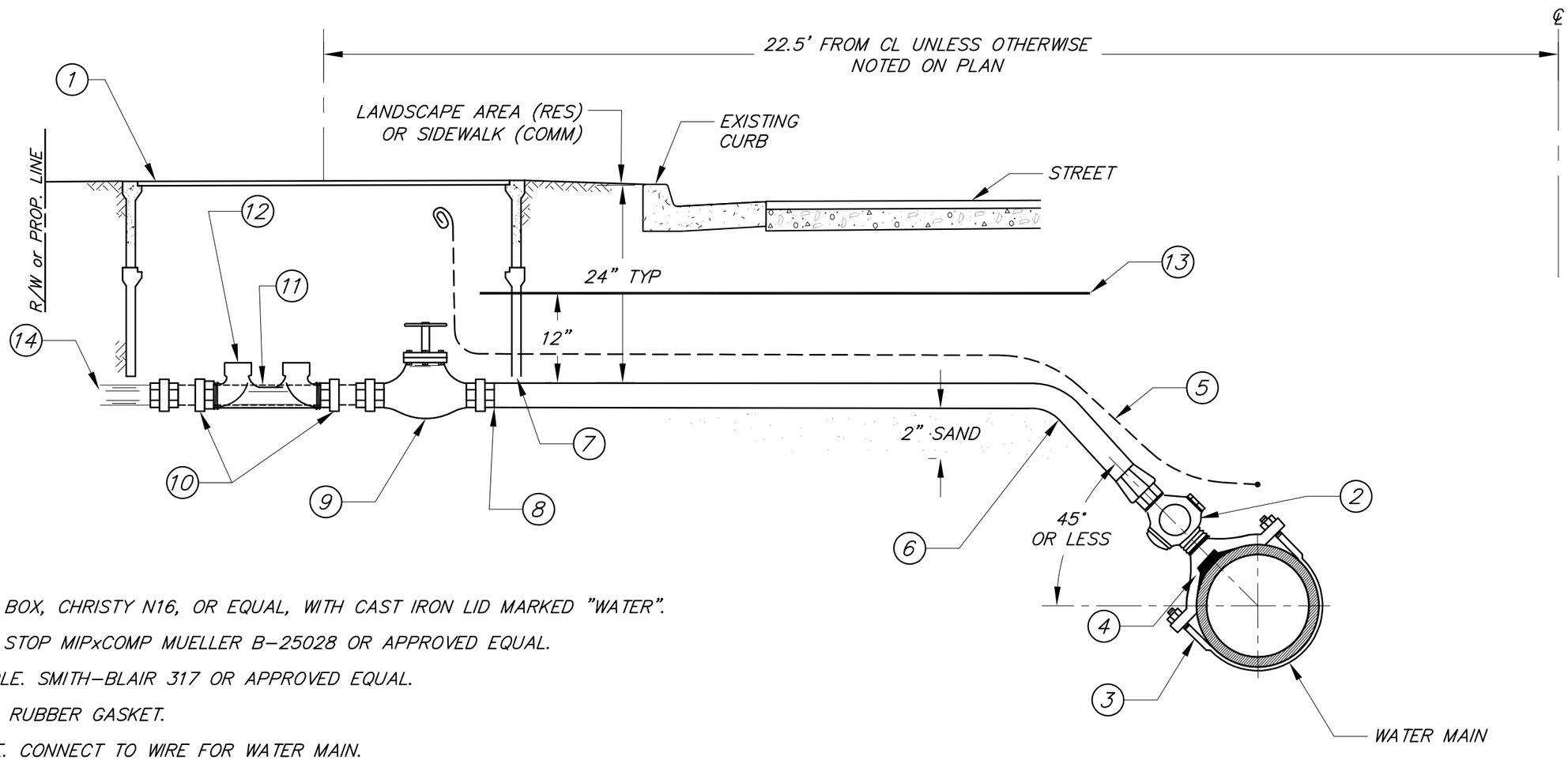

NOTES:

1. WATER METER BOX, CHRISTY N16, OR EQUAL, WITH CAST IRON LID MARKED "WATER".
2. CORPORATION STOP MIPxCOMP MUELLER B-25028 OR APPROVED EQUAL.
3. SERVICE SADDLE. SMITH-BLAIR 317 OR APPROVED EQUAL.
4. NEOPRENE OR RUBBER GASKET.
5. LOCATOR WIRE. CONNECT TO WIRE FOR WATER MAIN.
6. 1" CTS POLY PIPE 200 PSI WESFLEX GOLD LABEL OR APPROVED EQUAL.
7. EXTENSION BOX. NOTCHED FOR SERVICE ASSEMBLY.
8. CTSxMIP ADAPTER. MUELLER 15428 OR APPROVED EQUAL.
9. FORD METER BOX COMPANY 1" FIPxMIP CURB STOP WITH PADLOCK WING MODEL B11-444W-NL OR APPROVED EQUAL.
10. MUELLER TAIL PIECE H10890 OR EQUIVALENT.
11. 1 1/4" x 10 3/4" METER IDLER.
12. FUTURE 1" METER INSTALLED BY OTHERS.
13. BLUE WARNING TAPE.
14. CONNECT TO EXISTING SERVICE. CAP END IF NO EXISITNG SERVICE.
15. FUTURE METER SPACE SHALL BE SUFFICIENT TO ACCOMMODATE A 1" SENSUS WATER METER MODEL 6750896031054 AND YOKE.
16. ALL POLY PIPE REQUIRES STIFFENERS.

STANDARD DETAILS FOR PUBLIC WORKS CONSTRUCTION

1" WATER SERVICE

CITY OF BISHOP
100 Years of Service
INCORPORATED 1903
INYO COUNTY CALIFORNIA

APPROVED BY PUBLIC WORKS DIRECTOR

20 APRIL 2012
DATE

STANDARD DETAILS FOR PUBLIC WORKS CONSTRUCTION

1" WATER SERVICE

DATE	REVISION	STANDARD DETAIL NO.
		W-2
		SCALE:
		NOT TO SCALE

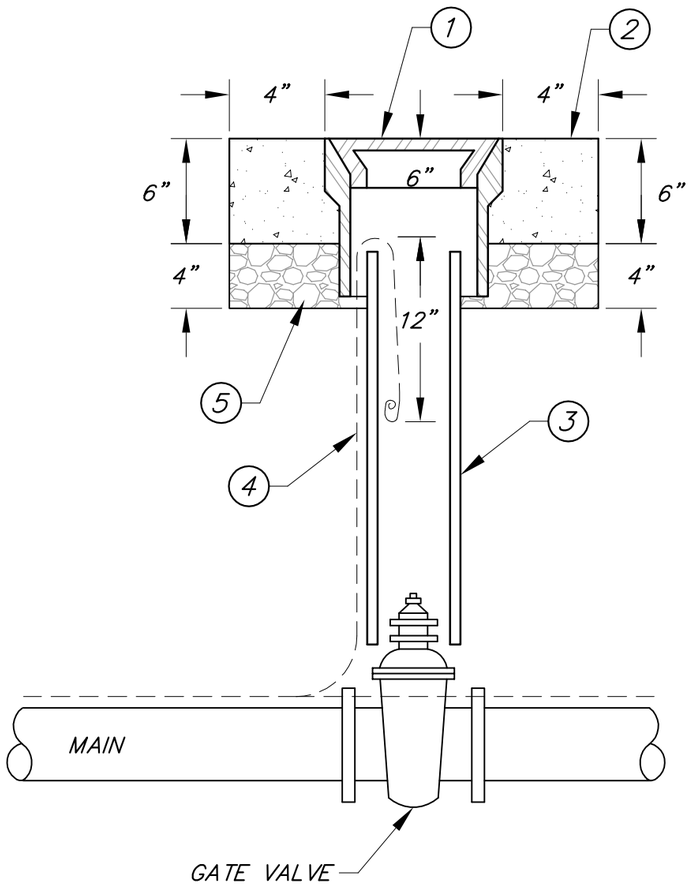

NOTES:

1. CHRISTY G-5 VALVE BOX.
2. CLASS 1 CONCRETE COLLAR.
3. 8" PVC SDR 35 RISER.
4. LOCATOR WIRE.
5. AGGREGATE BASE

STANDARD DETAILS FOR PUBLIC WORKS CONSTRUCTION

VALVE BOX & RISER

CITY OF BISHOP
100 Years of Service
INCORPORATED 1903
INYO COUNTY CALIFORNIA

APPROVED BY
PUBLIC WORKS DIRECTOR

20 APRIL 2012
DATE

STANDARD DETAILS FOR PUBLIC WORKS CONSTRUCTION

VALVE BOX & RISER

DATE	REVISION

STANDARD DETAIL NO.
W-4

SCALE:
NOT TO SCALE