City of Bishop, California

Bidding Information

and

Contract Documents

for

Pasture Grading 2017

in the

City of Bishop, County of Inyo, California

16 November 2017

Approved:

David Grah
Director of Public Works

Notice To Bidders

Sealed proposals will be received at the City of Bishop Public Works office, City Hall, 377 West Line Street, Bishop, California, 93514 until nine o'clock (9:00) in the morning on 11 December 2017, for furnishing all labor, materials, tools, implements and machinery to do and complete all work in a manner satisfactory to the City Engineer, for the following project:

Pasture Grading 2017

Together with such other incidental items as are necessary to complete the work in the manner and time prescribed and in strict conformity with the contract documents.

At 9:01 in the morning on the above date, said proposals will be publicly opened and read aloud.

All proposals shall be made using the forms furnished by the City and shall be enclosed and sealed in an envelope which is addressed to the City Council, Bishop, California, and is clearly labeled:

Bid for Pasture Grading 2017

Bid books including plans, specifications, bid forms to be used for bidding on this project and other contract documents can be obtained at the City of Bishop City Hall, 377 West Line Street, Bishop, California, 93514, 760-873-8458, and publicworks@cityofbishop.com. Only bids referencing all addendums issued for the project shall be considered. To receive addendums and other information issued on the project during the advertisement period, provide your contact information to the Bishop Public Works in City Hall at the above addresses and number at least two working days prior to bid opening.

This project is on Main Street in the City of Bishop which is also Highway 395. This project includes removal and relocation of existing street lights. The project includes furnishing of all labor, implements, tools, machinery, materials and all other work required to complete the project.

The estimated range for the construction cost of the project is from $50,000 to $100,000.

This project is funded with city funds. As a result, contracting preferences apply to this project.

Technical questions should be directed to the Director of Public Works, City of Bishop, 377 West Line Street, Bishop, California, 93514, 760-873-8458, publicworks@cityofbishop.com.

The successful bidder shall furnish all items required in the contract documents.

All proposals shall include prices for all items of work for all construction options contained in the contract documents. The City intends to award the contract to the bidder with the lowest responsive bid for the most extensive construction option the City is able to fund from the allotment available for this project. Responsive bid proposals shall include:

1. Completed Bid Form

2. Bid Bond or other security
3. Completed Non-collusion Declaration form
4. Completed Contractor's Certificate Regarding Worker's Compensation form
5. Completed Proposed Equipment and Material Manufacturers form
6. Completed Proposed Subcontractors form
7. Completed Contractor Licenses form
8. If a local business preference is claimed, completed City of Bishop Local Business Verification form

The City of Bishop hereby notifies all bidders that it will affirmatively ensure that in any contract entered into pursuant to this advertisement, disadvantaged business enterprises will be afforded full opportunity to submit bids in response to this invitation and will not be discriminated against on the grounds of race, color, or national origin in consideration for an award.

The contract is subject to state contract nondiscrimination and compliance requirements pursuant to Government Code, Section 12990.

Pursuant to Section 1773 of the Labor Code, the general prevailing wage rates in the county, or counties, in which the work is to be done have been determined by the Director of the California Department of Industrial Relations. These wages are set forth in the General Prevailing Wage Rates for this project, available at City of Bishop and available from the California Department of Industrial Relations' Internet web site at http://www.dir.ca.gov/DLSR/PWD. Future effective general prevailing wage rates, which have been predetermined and are on file with the California Department of Industrial Relations are referenced but not printed in the general prevailing wage rates.

The Contractor shall procure all required permits and licenses, pay all charges, fees and taxes, and give all notices necessary and incidental to the due and lawful prosecution of the work.

The City Council of the City of Bishop, California, reserves the right to reject any and all proposals and to waive any formalities in the proposal.

Bid Form

Proposal to City of Bishop for the construction of

Pasture Grading 2017

Bidder Information:

Name: _____

Address: _____

_____

Phone: _____

Email: _____

To the Bishop City Council:
Pursuant to and in compliance with your Notice to Bidders inviting sealed proposals (bids) and the other documents relating thereto, the undersigned bidder, being fully familiar with the terms of the contract documents, local conditions affecting the performance of the contract, the character, quality, quantities, and scope of work, and the cost of the work at the place where the work is to be done, hereby proposes and agrees to perform within the time stipulated in the contract, including all of its component parts and everything required to be performed, and to furnish any and all of the labor, material, tools, equipment, transportation, services, permits, utilities, and all other items necessary to perform the contract and complete in a workman like manner, all of the work required in connection with the construction of said work all in strict conformity with the plans and specifications and other contract documents, including Addenda _____, _____, _____, and _____, for the prices hereinafter set forth.

The bidder, under penalty of perjury, certifies that, except as noted on an attached page, he/she or any other person associated therewith in the capacity of owner, partner, director, officer, and manager: Is not currently under suspension, debarment, voluntary exclusion, or determination of ineligibility by any federal agency; Has not been suspended, debarred, voluntarily excluded or determined ineligible by any federal agency within the past 3 years; Does not have a proposed debarment pending; and Has not been indicted, convicted, or had a civil judgment rendered against it by a court of competent jurisdiction in any matter involving fraud or official misconduct within the past 3 years. If there are any exceptions to this certification, insert the exceptions on an attached page.

The undersigned as bidder, declares that the only persons or parties interested in this proposal as principals are those named herein and that this proposal is made without collusion with any person, firm, or corporation; and he proposes and agrees, if the proposal is accepted, that he will execute a contract with the City in the form set forth in the contract documents and that he will accept in full payment thereof the unit prices on the following page.

Item	Quantity	Unit	Description	Unit Price	Total Item Price
1	1	LS	Mobilization		
2	163,351	SF	Pasture Grading		
3	494	LF	Grader Ditch		
4	116	LF	Irrigation Ditch		
5	67	CY	Imported Material		
6	36	EA	Irrigation Pipe		
7	1	LS	Headwall		
8	40	LF	Culvert		
				Total Bid	

CY is cubic yard; EA is each; LF is linear foot; LS is lump sum; SF is square foot

Check one and provide required information:

- ☐ No contracting preference is claimed
- ☐ California Small Business contracting preference is claimed
- ☐ Local business contracting preference is claimed
- ☐ Small business subcontracting preference is claimed

In the event the total amount for an individual bid item does not agree with the product of the estimated quantity and unit price bid for that item, the unit price stated for the individual item shall govern and the incorrect total amount for that item shall be corrected. In the event the Total Bid does not agree with the sum of the total amounts bid for the respective bid items, the total amounts for the respective bid items shall govern and the incorrect Total Bid shall be corrected.

Unit prices for all items, extensions and total amount of bid must be shown. The proposal submitted shall be in effect for 30 days after the opening of bids.

Accompanying this proposal is a deposit in the form of a _____(Insert words "certified check", "cashier's check", "bid bond", "cash", or appropriate description of substitute security, as the case may be) in the amount of $_____ which amount is not less than 10% of the total bid, payable to the CITY OF BISHOP.

The undersigned deposits the above-named security as a proposal guarantee and agrees that it shall be forfeited to the City in case this proposal is accepted by the City and the undersigned fails to execute a contract with the City as specified in the contract documents or fails to furnish the required payment and performance bonds, or substitute, and insurance certificates and endorsements. Should the City be required to engage the services of an attorney in connection with the enforcement of this bid, bidder promises to pay City's reasonable attorneys' fees, incurred with or without suit.

The names of all persons interested in the foregoing proposals as principals are as follows. If bidder is a corporation, state legal name of corporation, also names of the president, secretary, treasurer, and manager thereof; if a general partnership, state true name of firm, also names of all individual partners composing firm; if a limited partnership, the names of all general partners and limited partners; if an individual, state first and last names in full; if the bidder is a joint venture, state the complete name of each party.

_____

_____

_____

_____

Authorized Bidder Representative:

Name (typed or printed): _____ (SEAL)

By: _____

(Individual's signature – attach evidence of authority to sign)

Title: _____

Bid Bond

(10% of Total Bid Amount)

We, _____as Principal,

and _____as Surety, jointly and severally, bind ourselves, our heirs, representatives, successors and assigns, as set forth herein to the

City of Bishop, California

(herein called City) for payment of the penal sum of _____
_____
_____ Dollars ($_____), lawful money of the United States. Principal has submitted the accompanying bid for the construction of

Pasture Grading 2017

If the Principal is awarded the contract and enters into a written contract, in the form prescribed by the City, at the price designated by his bid, and files two bonds with the City, or substitute security in lieu thereof, one to guarantee payment for labor and materials and the other to guarantee faithful performance, in the time and manner specified by the City, and carries all insurance in type and amount which conforms to the contract documents, and furnishes required certificates and endorsements thereof, then this obligation shall be null and void; otherwise it shall remain in full force and effect.

Forfeiture of this bond, or any deposit made in lieu thereof, shall not preclude the City from seeking all other remedies provided by law to cover losses sustained as a result of the Principal's failure to do any of the foregoing.

Principal and Surety agree that if the City is required to engage the services of an attorney in connection with the enforcement of this bond, each shall pay City's reasonable attorney's fees incurred with or without suit.

Executed on _____

_____
PRINCIPAL

(Seal of Corporation) By _____

Title _____

(Attach Acknowledgment of Authorized Representative of Principal)

Any claims under this bond may be addressed to:

_____(Name and address of Surety)

_____

_____

_____

_____

_____(Name and address of Surety's agent for service of process in California, if different from above)

_____

_____

_____ (Telephone number of Surety's agent in California)

(Attach Acknowledgement)

_____
SURETY

By_____
(Attorney-in-Fact)

Non-collusion Declaration

The undersigned declares:

I am the _____

of _____,

the party making the foregoing bid.

The bid is not made in the interest of, or on behalf of, any undisclosed person, partnership, company, association, organization, or corporation. The bid is genuine and not collusive or sham. The bidder has not directly or indirectly induced or solicited any other bidder to put in a false or sham bid. The bidder has not directly or indirectly colluded, conspired, connived, or agreed with any bidder or anyone else to put in a sham bid, or to refrain from bidding. The bidder has not in any manner, directly or indirectly, sought by agreement, communication, or conference with anyone to fix the bid price of the bidder or any other bidder, or to fix any overhead, profit, or cost element of the bid price, or of that of any other bidder. All statements contained in the bid are true. The bidder has not, directly or indirectly, submitted his or her bid price or any breakdown thereof, or the contents thereof, or divulged information or data relative thereto, to any corporation, partnership, company, association, organization, bid depository, or to any member or agent thereof, to effectuate a collusive or sham bid, and has not paid, and will not pay, any person or entity for such purpose.

Any person executing this declaration on behalf of a bidder that is a corporation, partnership, joint venture, limited liability company, limited liability partnership, or any other entity, hereby represents that he or she has full power to execute, and does execute, this declaration on behalf of the bidder.

I declare under penalty of perjury under the laws of the State of California that the foregoing is true and correct and that this declaration is executed on

Date _____ at

City, State _____

Signature _____

Printed Name _____

Contractor's Certificate Regarding Worker's Compensation

Description of Contract: City of Bishop **Pasture Grading 2017**

Labor Code Section 3700 Provides (in part):

> "Every employer except the State shall secure the payment of compensation in one or more of the following ways:
>
> A. By being insured against liability to pay compensation in one or more insurers duly authorized to write compensation insurance in this State.
>
> B. By securing from the Director of Industrial Relations a certificate of consent to self-insure, which may be given upon furnishing proof satisfactory to the Director of Industrial Relations of ability to self-insure and to pay any compensation that may become due to his employees."

I am aware of the provisions of Section 3700 of the Labor Code which require every employer to be insured against liability for worker's compensation or to undertake self-insurance in accordance with the provisions of that code, and I will comply with such provisions before commencing the performance of the work of this contract.

Dated: _____ _____

(Contractor)

By _____

_____

(Official Title)

Proposed Equipment And Material Manufacturers

Awarding of a contract will not imply approval by the City of the manufacturers or suppliers proposed by the Contractor. The proposed equipment and materials to be incorporated in the work, their manufacturers, and suppliers are:

Proposed Subcontractors

As required by Section 4100-4107 of the Public Contract Code, the Contractor shall list the subcontractors proposed for this project. No substitution will be permitted after award of contract except upon written approval of the City. The proposed subcontractors on this project are listed below. If small business subcontracting preference is claimed, provide percentage of total bid for each small business subcontractor.

Description of Work	% of Bid	Name of Subcontractor	Subcontractor License Number	Location of Mill Shop, or Office

Contractor Licenses

The Contractor's license classifications required for this project are as follows:

Class A – General Engineering Contractor

These classifications are provided for information purposes only. The Engineer does not warrant that all classifications required for the project are listed.

It is the City's intent that "plans," as used in Public Contract Code Section 3300, is defined as the construction contract documents, which include both drawings and specifications.

The contractor hereby confirms that it has all licenses and permits required by federal, state, and local statutes, regulations, and ordinances. The following are the Contractor's applicable license numbers:

Contractor's License Number	Expiration Date
_____	_____
_____	_____
_____	_____
_____	_____

I state under penalty of perjury that all information submitted by me and included in this contract is true and correct.

Signature of Bidder: _____

_____

_____

_____

Dated: _____

City of Bishop Local Business Verification

Complete and submit this form to claim Local Business status pursuant to Chapter 3.26, Contracting Preferences, of the Bishop Municipal Code.

Business: _____

Contact: _____

Telephone: _____

Email: _____

Bid or Project: _____

1. **Business Location:** Provide street addresses or locations of your business for the past six months. Indicate if headquarters, distribution point, or locally-owned franchise.

_____

Addresses or Locations Headquarters, Distribution Point, or Franchise

2. **Business License:** Provide issuing jurisdiction and number of local business license and attach a copy. Indicate if no license is required.

_____

Jurisdiction License number

3. **Business Employment:** Provide the name and street address of one full-time employee or names and street addresses of two part-time employees employed by your business. If your business has no employees, provide the names and street addresses of local business owners that own 50% or larger share of business.

	Name 1	Name 2
Name:		
Street:		
City, State, ZIP:		
Full, Part Time, or Share:		

Certification: I acknowledge I have read and understand the criteria for contracting preferences as defined under Chapter 3.26 of the Bishop Municipal Code. I swear and affirm under penalty of perjury that the above information is true and correct and that the business listed above is qualified and eligible to receive a local preference. Bishop Municipal Code available at www.cityofbishop.com or at City Hall.

_____

Signature Title Date

Agreement

THIS AGREEMENT, made and entered into by and between the

City of Bishop, California

hereinafter referred to as "CITY" and

_____

a corporation under the laws of the state of _____;

hereinafter referred to as "CONTRACTOR".

CITY and CONTRACTOR agree as follows:

1. SCOPE OF WORK: Contractor shall furnish all materials and shall perform all of the work for the construction of the Pasture Grading 2017 in accordance with this agreement and the other contract documents.

2. TIME FOR COMPLETION: The work shall be completed within the times set forth in the contract documents. Time is of the essence and forfeiture due to delay will be assessed as provided for in the contract documents.

3. CONTRACT SUM: CITY will pay CONTRACTOR as described in the Contractor bid and the rest of the contract documents.

4. PAYMENTS: Payment will be made in accordance with the contract documents. The filing of the notice of completion by CITY shall be preceded by acceptance of the work made only by an action of the City Council.

5. COMPLIANCE WITH PUBLIC CONTRACTS LAW: CITY is a public agency in the State of California and is subject to the provisions of law relating to public contracts. It is agreed that all provisions of law applicable to public contracts are a part of this contract to the same extent as though set forth herein and will be complied with by CONTRACTOR.

6. CONTRACT DOCUMENTS: The complete contract includes all of these documents:

   - Notice to Bidders
   - Bid Form
   - Agreement
   - Payment Bond

- Worker's Compensation Certificate
- Special Provisions
- Other referenced documents

This Agreement is executed by the CITY pursuant to an action of its Governing Body in session on _____, authorizing the same, and CONTRACTOR has caused this Agreement to be duly executed.

Dated:
_____By_____
City Administrator

Dated:
_____By_____
(Contractor)
Title:
_____

APPROVED AS TO FORM:

_____
City Attorney

Payment Bond

(100% of the Agreement Amount)

We, _____as Principal,

and _____as Surety, jointly and severally, bind ourselves, our heirs, representatives, successors and assigns, as set forth herein to the

City of Bishop

(herein called City) for payment of the penal sum of _____ _____ _____ Dollars ($_____), lawful money of the United States. City has awarded Principal a contract for the construction of

Pasture Grading 2017

If Principal or any of his subcontractors fails to pay any of the persons named in Section 3181 of the California Civil Code, or amounts due under the Unemployment Insurance Code with respect to work or labor performed under the contract or during the one-year guarantee period, or for any amounts required to be deducted, withheld, and paid over to the Franchise Tax board from the wages of employees of the contractor and his subcontractors pursuant to Section 13020 of the Unemployment Insurance Code, with respect to such work and labor, then Surety will pay the same in an amount not exceeding the sum specified above, and also will pay, in case suit is brought upon this bond, such reasonable attorney's fees as shall be fixed by the court.

This bond shall insure to the benefit of any of the persons named in Section 3181 of the California Civil Code, so as to give a right of action to them or their assigns in any suit brought upon this bond.

Surety agrees that no change, extension of time, alteration, or addition to the terms of the contract, or the work to be performed there under, or the plans and specifications shall in any way affect its obligation on this bond, and it does hereby waive notice thereof.

Principal and Surety agree that if the City is required to engage the services of an attorney in connection with the enforcement of this bond, each shall pay City's reasonable attorney's fees incurred with or without suit, in addition to above sum.

Executed in two original counterparts on _____, 20____

_____
PRINCIPAL

(Seal of Corporation) By _____

Title _____

Any claims under this bond may be addressed to:

_____ (Name and address of Surety)

_____

_____

_____

_____

_____ (Name and address of Surety's agent for service of process in California, if different from above)

_____

_____

_____ (Telephone number of Surety's agent in California)

(Attach Acknowledgement)

_____
SURETY

By_____
(Attorney-in-Fact)

APPROVED:

_____
(Attorney for CITY)

Special Provisions

A. GENERAL PROVISIONS

1. GENERAL

Unless otherwise stated, the work embraced herein shall be done in accordance with the 2015 Standard Specifications and the Standard Plans of the State of California, Department of Transportation insofar as the same may apply and in accordance with these Special Provisions. Copies of the Standard Plans and the Standard Specifications may be obtained from the Department of Transportation. In addition the City of Bishop Specifications for Domestic Water and Sanitary Sewer System (1991) shall also apply. Copies may be obtained from the City of Bishop Public Works Department.

When approved by the Engineer, forms, documents, and standards equivalent to those specified may be used.

In the event of conflict between these Special Provisions, the project plans, the City of Bishop Specifications for Domestic Water and Sanitary Sewer System, the Standard Specifications, and the Standard Plans the order of precedent shall be these Special Provisions over the project plans over the technical specifications of the City of Bishop Specifications for Domestic Water and Sanitary Sewer System over the Standard Specifications over the remaining sections of the City of Bishop Specifications for Domestic Water and Sanitary Sewer System over the Standard Plans.

2. GLOSSARY

All definitions and terms in Section 1-1.07B, Glossary, of the Standard Specifications shall apply, except whenever the following terms are used the intent and meaning shall be as follows.

Bid Item List: The bid form corrected for math errors.
Contract: Executed agreement between the City and Contractor.
Contract Documents: The documents which make up the Contract, including any and all documents incorporated therein; also, any and all written agreements between the City and Contractor which amend or change the Contract. Referred to as the Bid Book in the Standard Specifications.
City: The City of Bishop, State of California, working through its Public Works Department.
Department: The Public Works Department of the City of Bishop.
Director: The Public Works Director of the City of Bishop.
Department of Transportation: The Public Works Department of the City of Bishop, except when Department of Transportation publications are cited, such cites are to remain as written and refer to the State of California, Department of Transportation, also known as Caltrans.

Engineer: The Public Works Director of the City of Bishop, acting either directly or through properly authorized agents, such agents acting within the scope of the particular duties delegated to them.
Laboratory: The Laboratory of the Public Works Department or other laboratories authorized by the Public Works Department of the City of Bishop to test materials and work involved in the Contract.
Office Engineer: The Public Works Director of the City of Bishop.
Owner: The City.
State or State of California: The City except when State publications or standards are cited, such cites are to remain as written and refer to the State of California.

3. CHANGES TO STANDARD SPECIFICATIONS

The following sections are deleted from the Standard Specifications:
2-1.02, Bid Ineligibility
2-1.06, Bid Documents
2-1.18, Small Business and Non-Small Business Subcontractor Preferences
2-1.27, California Companies
2-1.33D, Opt Out of Payment Adjustments for Price Index Fluctuations
3-1.08, Small Business Participation Report
3-1.11, Payee Data Record,

Delete the numbered list in Section 3-1.18, Contract Execution

Deleted the second and third paragraphs of Section 2-1.33A, Bid Document Completion - General.

Modify Section 5-1.23, Submittals, to identify each sheet by the project name.

Delete the column "Umbrella or excess liability" from Liability Limits table of Section 7-1.06D(2), Liability Limits / Additional Insureds.

4. PROPOSAL REQUIREMENTS

The bidder's attention is directed to the provisions in Section 2, Bidding, of the Standard Specifications and these special provisions for the requirements and conditions which the bidder must observe in the preparation and the submission of the bid. Subcontracting Request forms are not required but each proposal shall list the portion of work that will be done by each subcontractor. A sheet for listing the subcontractors is included in the Proposal.

The contractor or subcontractor shall not discriminate on the basis of race, color, national origin, or sex in the performance of this contract.

5. BONDS

The Contractor, simultaneously with the execution of the contract, shall furnish a payment bond in an amount equal to 100 percent of the contract amount, or equivalent cash or security in lieu of bonds pursuant to Section 995.710 of the Code of Civil Procedures. Bonds shall be

furnished by surety companies satisfactory to the City on the forms furnished as part of the contract documents. Surety companies, to be acceptable to the City, must be authorized to do business and have an agent for service of process in California.

6. SCOPE OF WORK

The scope of the work shall consist of the work described in the contract documents for the **Pasture Grading 2017** project and as provided in the improvement plans.

7. PRE-CONSTRUCTION CONFERENCE

Prior to issuance to the Notice to Proceed, the City will hold a pre-construction conference for the purpose of discussing essential matters pertaining to the pursuit of the satisfactory completion of the project. The Contractor's representatives at this conference shall include all major superintendents for the work and may include subcontractors.

8. CONSTRUCTION STAKES

Construction staking shall consist of stakes at +00 stations along layout line and 200 feet right.

9. SUBMITTALS

In addition to submittals required in the Standard Specifications and elsewhere in these Special Provisions, the Contractor shall submit the following information to the City 7 working days prior to beginning of work for review and approval.

a) A schedule of work conforming to Section 8-1.02B, Level 1 Critical Path Model Schedule, of the Standard Specifications.
b) A health and safety plan.

Each submittal shall include a cover sheet clearly describing the purpose of the submittal and containing a statement that the contractor each page of submittals shall include a statement the contractor has examined and verified all field dimensions and measurements, field construction criteria, materials, and similar data, and they meet the requirements for the project. Submittals shall provide sufficient information to determine that the item is in compliance with the requirements.

10. PERMITS AND LICENSES

The following permits and licenses are known to be required for the work:

a) City of Bishop Business License and
b) California Contractors License Classification A

11. TIME OF COMPLETION

The Contractor shall have 20 working days to complete the work.

12. LIQUIDATED DAMAGES

Liquidated damages shall be $500 per day.

13. MEASUREMENT AND PAYMENT

All work will be measured and paid for as shown on the bid form and the contract documents.

Item quantities shall be measured by planned, actual, or lump sum in accordance with these special provisions. Item quantities to be measured for payment by planned quantities shall be based on theoretical or calculated quantities of completed work based on the plans. Item quantities to be measured for payment by actual quantities shall be determined by measurement of completed work.

The price paid for bid items shall include full compensation for furnishing all labor, materials, tools, equipment, and incidentals, and for doing all the work involved in completing those items of work complete in place in accordance with the contract documents.

When the contract does not include a contract pay item for work required by the contract, full compensation for that work is included in the prices paid for the contract pay items included in the contract.

The Contractor with assistance from the City shall, on or before the tenth day of each calendar month after construction work is started, cause an estimate in writing to be made of the value of the work completed.

A request for payment shall be submitted by the Contractor each month and upon completion of all work for approval and payment by the City.

The City shall retain 10 percent of the estimated value of the work done and 10 percent of the value of materials so estimated to have been furnished and delivered and unused or furnished and stored as aforesaid as part security for the fulfillment of the contract by the Contractor, except that at any time after 20 percent of the work has been completed, if the Engineer finds that satisfactory progress is being made, the City may reduce the total amount being retained from payment pursuant to the above requirements to 5 percent of the estimated value of the work and materials and may also reduce the amount retained from any of the remaining partial payments to 5 percent of the estimated value of the work and materials. In addition, on any partial payment made after 95 percent of the work has been completed, the Department may reduce the amount withheld from payment pursuant to the requirements of this section to such lesser amount as the Department determines is adequate security for the fulfillment of the balance of the work and other requirements of the contract, but in no event will that amount be reduced to less than 125 percent of the estimated value of the work yet to be completed as determined by the Engineer.

Attention is directed to the provisions in Sections 10262 and 10262.5 of the Public Contract Code concerning prompt payment to subcontractors.

14. RESOLUTION OF CLAIMS
All public works claims between the Contractor and City relating to this contract where the total claims of both parties are equal or less than $375,000 shall be resolved in accordance with Public Contract Sections 20104 et seq., which are incorporated herein by reference. There shall be no claims for labor compliance issues.

15. GENERAL SAFETY
Contractor shall transmit to the City copies of reports and other documents related to accidents and injuries encountered during this work. Where there is conflict between applicable safety orders, laws and regulations and policies, the more stringent measures shall apply.

16. CHEMICALS
The Contractor shall provide two copies of Material Safety Data Sheets to the City for all chemicals used during this project at least three days prior to bringing them on site. Use of all such chemicals and disposal of residues shall be in strict accordance with the printed instructions of the manufacturer.

If the Contractor encounters hazardous substances during this work, he shall immediately notify the City and the County Environmental Services Office. Hazardous substances shall be disposed of in accordance with the requirements of Inyo County Department of Environmental Health.

B. BID ITEMS

1. Mobilization

Mobilization shall be measured lump sum.

2. Pasture Grading

Pasture Grading shall include grading area within grading boundary to planned grades and shall include constructing borders. Approximate Pasture Grading cuts and fills on 25 foot centers are shown on attached sheet. Earthwork approximately balances within grading boundary and shall be balanced by adjusting southern grading boundary. Grading plane for Pasture Grading shall not vary more than 0.05 foot from the grade established by the Engineer. Borders that are functionally equivalent to border detail and that incorporate a similar amount of material may be used if approved by the engineer. Trees within grading area may be left in place or removed at contractors option. Compaction effort shall be minimum to prevent settlement. Pasture Grading shall be measured actual.

3. Grader Ditch

Grader Ditch shall be measured actual.

4. Irrigation Ditch

Irrigation Ditch shall include construction of berms with imported or local material. Irrigation Ditch shall be measured actual.

5. Imported Material

Imported Material shall meet the requirements for aggregate subbases such as material available from the site commonly called the Poleta Community Pit near the location where Poleta Road changes to Eastside Road east of Bishop. Imported Material is material imported to modify existing ditch but not material imported to construct irrigation ditch or headwall or for other purposes. Imported Material shall be measured actual.

6. Irrigation Pipe

Irrigation Pipe shall meet the requirements for PVC sewer pipe and shall include a Waterman C-2 Galvanized Distributing Gate or equivalent as a control gate at its upstream end. Place two evenly spaced irrigation pipes between each pair of borders. Irrigation Pipe shall be measured actual.

7. Headwall

Headwall shall include Waterman C-10 Cast Iron Canal Gate or equivalent on each culvert. Headwall shall be measured lump sum.

8. Culvert

Culvert shall be measured actual.

C. MATERIALS

1. Portland Cement Concrete

Concrete shall be 711 Materials, Mix 650016F4, or equal, including synthetic fiber reinforcement.

2. Synthetic Fiber Reinforcement

The synthetic fibers specified shall conform to the requirements of ASTM C1116, Section 4.1.3 and Note 3, as well as International Conference of Building Officials Evaluation Service (ICBO ES) Acceptance Criteria 32, Sections 4.1.1 and 4.1.2. Both of these specifications apply to the use of synthetic fibers as secondary reinforcement in concrete. At the request of the project engineer the synthetic fiber vendor shall furnish a Letter of Certification stating compliance with these specifications and signed by a registered Professional Engineer.

Synthetic fibers shall be either nylon multifilament fiber or polypropylene collated fibrillated fiber or monofilament fiber.

Nylon multifilament or polypropylene monofilament fibers shall be introduced at the rate of 1 pound per cubic yard at the standard length of ¾ inch.

Polypropylene collated fibrillated fiber shall be introduced at the rate of 1.5 pounds per cubic yard at the standard length of ¾ inch.

Synthetic fibers shall be added at the concrete batch plant and mixed with the other ingredients for 3 to 5 minutes. The concrete producer shall list the type and quantity of synthetic fiber added on each delivery ticket.

3. PVC Sewer Pipe

Sanitary sewer shall be plastic pipe. Sewer pipe shall be Standard Dimension Ratio (SDR) 35 polyvinyl chloride (PVC) solid wall sewer pipe made of compounds conforming to ASTM D1784 and manufactured in accordance with the material requirements of ASTM D3034 or ASTM F679. Sewer pipe shall meet all dimensional, chemical, and physical requirements as outlined in ASTM D3034 and ASTM F679 or ASTM F679 ANNEX. Sewer pipe shall be installed according to the requirements of ASTM D2321. Joints shall meet the requirements of ASTM D3212 and shall be formed using a Rieber gasket system for sealing that meets the requirements of ASTM F477.

4. Culvert Pipe

Culvert pipe shall be Type S plastic pipe, smooth interior wall.

City of Bishop

Pasture Grading 2017
Approximate Pasture Grading Cuts and Fills

-0.20	-0.27	-0.45	0.00	0.00	0.00	0.00	0.00	0.00	0.00	0.00	0.00	0.00	0.00	0.00	0.00	0.00	0.00	0.00	0.00
-0.30	-0.35	-0.21	-0.45	-0.60	-1.06	0.00	0.00	0.00	0.00	0.00	0.00	0.00	0.00	0.00	0.00	0.00	0.00	0.00	0.00
0.00	-0.61	-0.17	-0.32	-0.40	-0.82	-0.80	-0.72	-0.90	0.00	0.00	0.00	0.00	0.00	0.00	0.00	0.00	0.00	0.00	0.00
0.00	-0.63	-0.12	-0.18	-0.40	-0.67	-0.75	-0.77	-0.20	0.68	-0.05	-0.02	0.00	-0.62	-0.65	-0.77	-1.20	-1.47	0.00	0.00
0.00	-0.33	-0.35	0.02	-0.32	-0.52	-0.70	-0.82	0.20	0.18	0.55	0.53	0.35	0.53	0.70	0.48	0.30	0.18	-0.15	0.00
0.00	-0.77	-0.55	0.16	-0.26	-0.23	-0.30	-0.57	0.30	0.58	0.85	0.93	0.50	0.51	0.45	0.23	0.20	0.28	-0.10	0.00
0.00	-0.57	-0.79	-0.23	-0.25	-0.33	-0.40	-0.52	1.90	1.88	1.65	1.13	0.55	0.48	0.15	-0.40	0.00	0.28	-0.15	0.00
0.00	-0.91	-0.74	-0.03	-0.10	-0.33	-0.58	-0.60	-0.15	0.78	1.25	1.03	0.79	0.53	0.35	0.08	0.10	0.08	-0.10	0.00
0.00	-0.97	-0.30	0.22	0.39	-0.08	-0.45	-0.23	-0.10	0.23	0.55	0.63	0.81	0.82	0.30	0.08	0.00	0.03	-0.30	0.00
0.00	-0.53	0.05	0.39	0.20	-0.11	-0.45	-0.18	0.30	0.73	0.40	-0.44	0.00	0.38	0.60	0.13	-0.15	-0.22	-0.35	0.00
0.00	0.77	1.00	0.32	0.40	0.12	-0.35	-0.43	-0.10	0.17	-0.05	-0.17	-0.70	-0.52	-0.55	0.01	0.00	-0.02	-0.60	0.00
0.00	0.85	1.20	0.72	0.50	0.07	-0.30	-0.83	-0.60	-0.68	-0.55	-0.27	-0.80	-0.97	-0.95	-0.70	-0.40	-0.22	-0.65	0.00
0.00	0.00	0.00	1.42	0.50	0.17	-0.30	-0.66	-0.70	-0.88	-0.85	-0.63	-0.50	-0.97	-1.10	-0.67	-0.55	-0.57	-0.55	0.00
0.00	0.00	0.00	0.00	0.40	-0.03	-0.25	-0.38	-0.60	-0.63	-0.45	-0.38	-0.40	-0.23	-0.60	-0.47	-0.30	-0.22	-0.25	0.03
0.00	0.00	0.00	0.00	1.50	-0.03	-0.30	-0.23	-0.35	-0.38	-0.25	-0.02	0.10	0.72	0.55	0.03	0.00	0.38	0.65	0.28
0.00	0.00	0.00	0.00	0.00	0.87	-0.20	0.07	0.20	0.02	-0.15	-0.28	0.00	0.32	0.15	0.43	0.70	0.93	1.15	0.23
0.00	0.00	0.00	0.00	0.00	0.00	0.00	0.42	0.63	0.37	0.05	0.07	0.45	0.21	0.31	0.52	1.30	0.88	1.05	0.33
0.00	0.00	0.00	0.00	0.00	0.00	0.00	0.00	0.00	0.52	0.60	0.42	0.95	0.82	0.70	0.82	1.20	1.23	0.85	0.00

Notes:
Cuts and fills in feet
Cuts are negative
Squares are 25 feet on each side
Grading boundary shown with border

Pond 4

Pond 5

+45
100 Lt

Irrigation Ditch

BM 4115.20 "Y" etched in Concrete

Connect irrigation ditch to existing ditch

4113

4113.5

+97
100 Lt

+02
90 Lt

+30
75 Lt

Modify Existing Ditch

4114

15 inch tree

FG 4112.5

Layout Line

5+00

1+00

2+00

3+00

4+00

4112.5

9 inch tree

15 inch tree

4113

4112

See headwall sheet

6, 8, 8, and 14 inch group of trees

Existing Road

0.1%

0.4%

36 inch tree

4109.5

4110.5

4111

4112

Construct Borders (see detail)

11 and 15 inch trees

4111.5

Grading Boundary

Debris piles in image not present

4110

4109

Grader Ditch

4108

4108.5

Existing Ditch

Connect Grader Ditch to Existing Ditch

Legend:

4112 Planned contour and elevation

4112 Existing contour and elevation

0.1% Planned slope

California

City of Bishop

Inyo County

City of Bishop Location Map

North Sierra Highway / Hwy 395

City of Bishop

Main Street / Hwy 395

Line Street / Hwy 168

Poleta Road

Project Location

Project Location Map

N

Feet

0 25 50 100

City of Bishop

Pasture Grading 2017 Plan

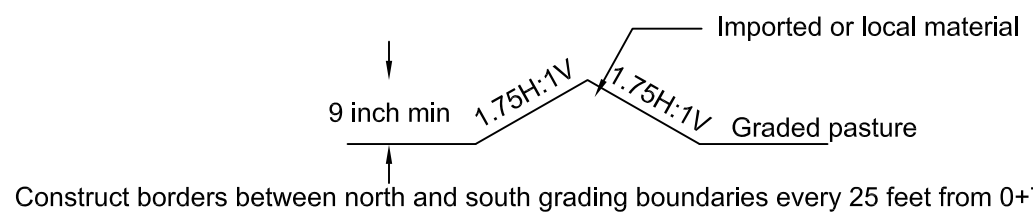

Border

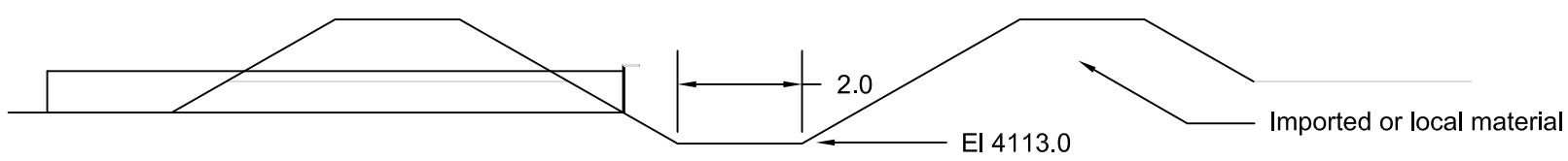

Same as Modify Existing Ditch except as shown

Irrigation Ditch

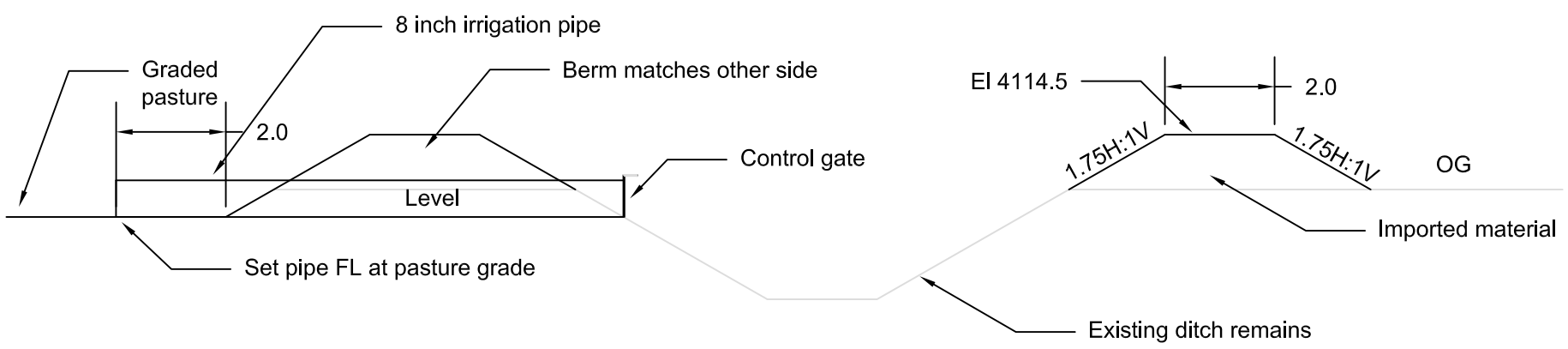

Modify Existing Ditch

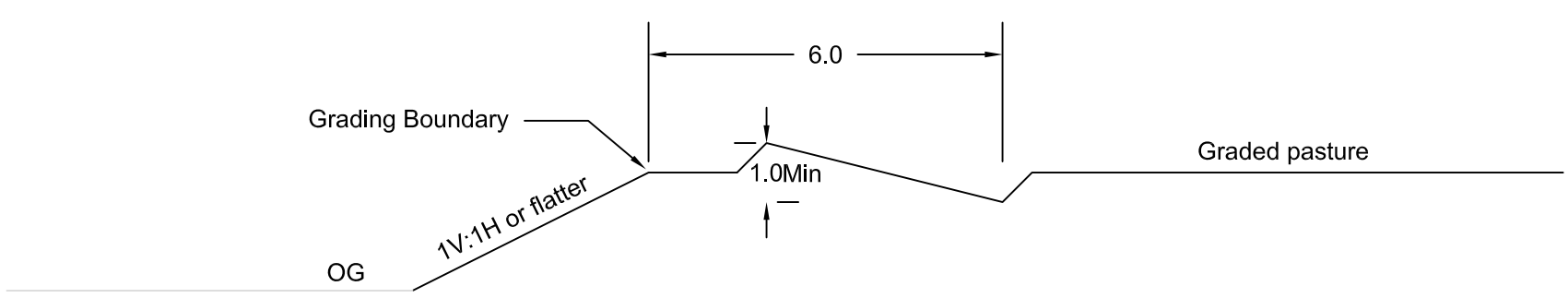

Grader Ditch

0 3
Original scale 1 inch = 3 feet

City of Bishop

Pasture Grading 2017 Details

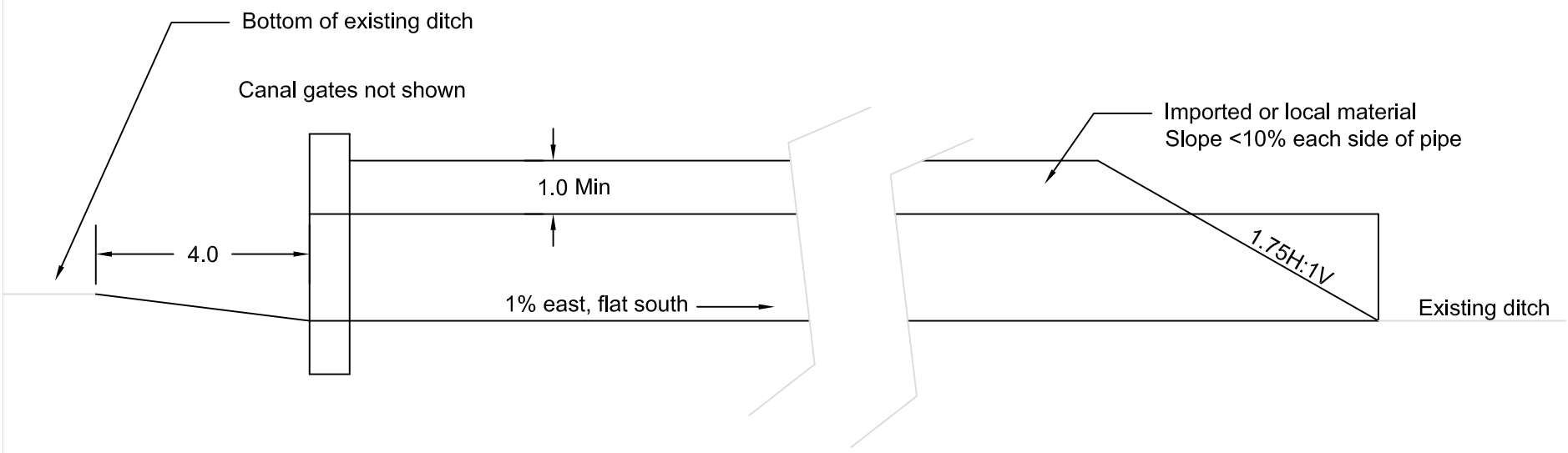

Culvert Profile

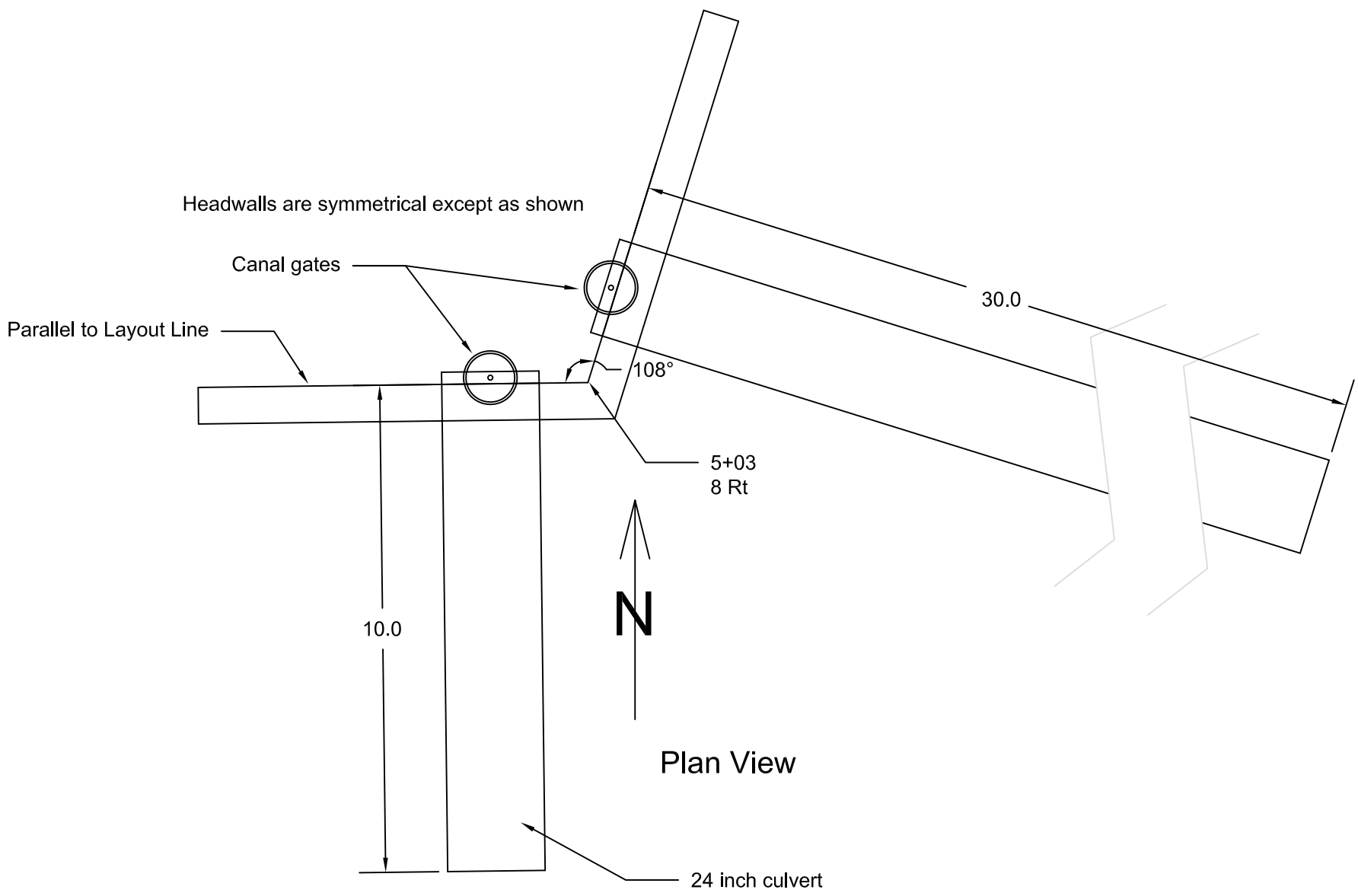

Plan View

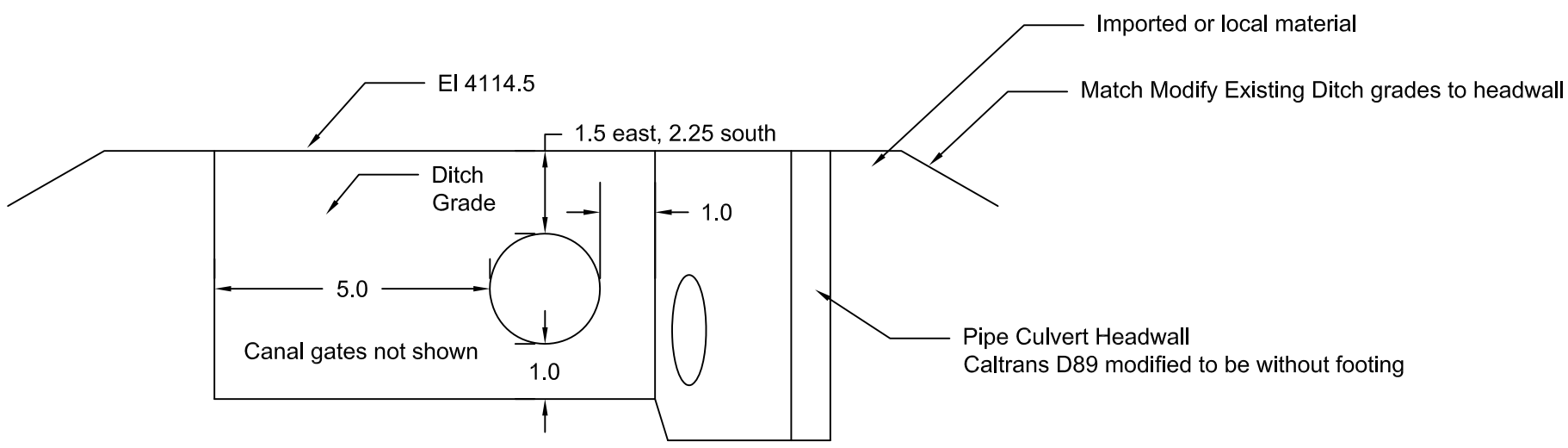

Elevation (looking east)

0 3
Original scale 1 inch = 3 feet

City of Bishop

Pasture Grading 2017 Headwall